PART D-01 ~ D-13

Diameter
● Shielded ○ non-Shielded
Switching Distance Sn mm
Housing Material
● With LED ○ Without LED

Dimensions (unit: mm)

Operating Voltage
Ripple
No Load Current
Max. Load Current
Leakge Current
Surge Current
Min. Load Current
Voltage Drop
Switching Frequency
Response Time
Switching Hysteresis
Repeat Accuracy
Protection Category
Operating Temperature
Temperature Drift
Short Circuit Protection
Overload Trip Point
Time Delay Before Availability
EMC
Shock / Vibration
Material Active Face

DC 3 wire 10-30V NPN N.O.
DC 3 wire 10-30V NPN N.C.
DC 3 wire 10-30V PNP N.O.
DC 3 wire 10-30V PNP N.C.
DC 4 wire 10-30V Changeover PNP (N.O. & N.C.)
DC 4 wire 10-30V Changeover NPN (N.O. & N.C.)
DC 2 wire 10-60V N.O.
DC 2 wire 10-60V N.C.
DC 3 wire 10-55v NPN N.O. or NAMUR
DC 3 wire 10-55v NPN N.C.
DC 3 wire 10-55v PNP N.O.
DC 3 wire 10-55v PNP N.C.
AC 2 wire 20-250V N.O.
AC 2 wire 20-250V N.C.
AC 2 wire 20-250V N.O. or N.C. Changeable
AC/DC 2 wire 20-250V N.O.
AC/DC 2 wire 20-250V N.C.
AC/DC 2 wire 20-250V N.O. or N.C. Changeable

Remark

Cable 2M (PVC)
Weight

Please put each catalog page in the blank. The specification on the left will help your reading.

AC INDUCTIVE PROXIMITY SWITCH

M 12		M 12		M 12	
●	○	●	○	●	○
2 mm	4 mm	2 mm	4 mm	2 mm	4 mm
stainless steel or nickel plated brass		stainless steel or nickel plated brass		stainless steel or nickel plated brass	
●		●		●	

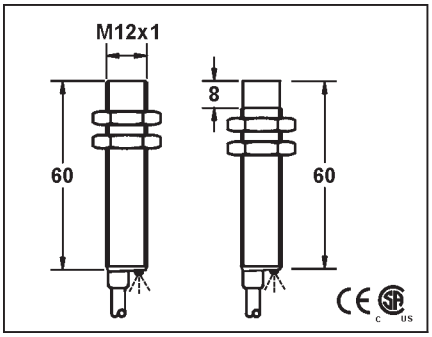

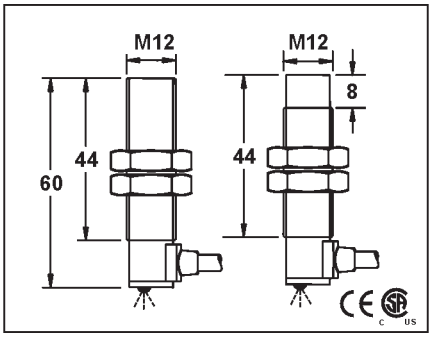

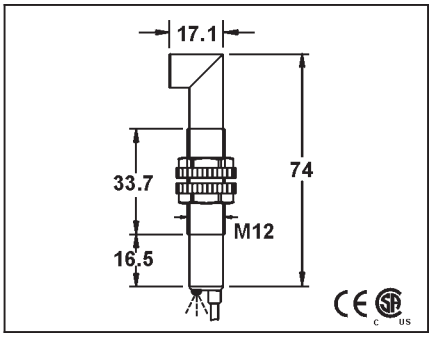

20-250VAC	20-250VAC	20-250VAC
-	-	-
<1.8mA	<1.8mA	<1.8mA
400mA	400mA	400mA
<1.8mA	<1.8mA	<1.8mA
5A(20ms)	5A(20ms)	5A(20ms)
5mA	5mA	5mA
<8VAC AT 400mA	<8VAC AT 400MA	<8VAC AT 400MA
<25HZ	<25HZ	<25HZ
10ms/10ms	10ms/10ms	10ms/10ms
<15%(Sr)	<15%(Sr)	<15%(Sr)
<1.0%(Sr)	<1.0%(Sr)	<1.0%(Sr)
IP67	IP67	IP67
-25 °C - +70 °C	-25 °C - +70 °C	-25 °C - +70 °C
<10%(Sr)	<10%(Sr)	<10%(Sr)
NO	NO	NO
-	-	-
-	-	-
RFI>3V/m / EFT>1KV / ESD>4KV (contact)	RFI>3V/m / EFT>1KV / ESD>4KV (contact)	RFI>3V/m / EFT>1KV / ESD>4KV (contact)
IEC 60947-5-2,Part 7.4.1 / IEC 60947-5-2,Part 7.4.2	IEC 60947-5-2,Part 7.4.1 / IEC 60947-5-2,Part 7.4.2	IEC 60947-5-2,Part 7.4.1 / IEC 60947-5-2,Part 7.4.2
POM / PBT	POM / PBT	POM

FCM1-1202A-A3L2	11	FCM2-1204A-A3L2	FCM1-1202A-A3L2Y	11	FCM2-1204A-A3L2Y	FCM1-1202A-A3L2Z	11	FCM2-1204A-A3L2Z
FCM1-1202A-B3L2	12	FCM2-1204A-B3L2	FCM1-1202A-B3L2Y	12	FCM2-1204A-B3L2Y	FCM1-1202A-B3L2Z	12	FCM2-1204A-B3L2Z

4 ϕ 3x0.34	4 ϕ 3x0.3 4	4 ϕ 3x0.34
Approx.77 g / Approx.76 g	Approx.77 g / Approx.76 g	Approx.77 g / Approx.76 g

AC INDUCTIVE PROXIMITY SWITCH

M 18		M 18		M 18	
●	○	●	○	●	○
5 mm	8 mm	5 mm	8 mm	5 mm	8 mm
stainless steel or nickel plated brass		stainless steel or nickel plated brass		stainless steel or nickel plated brass	
●		●		●	

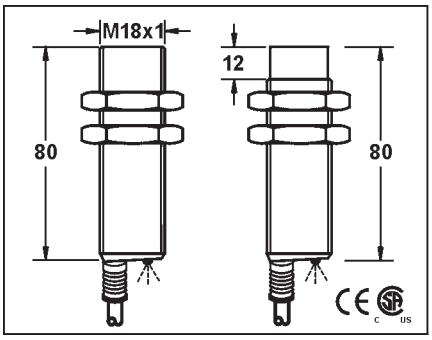

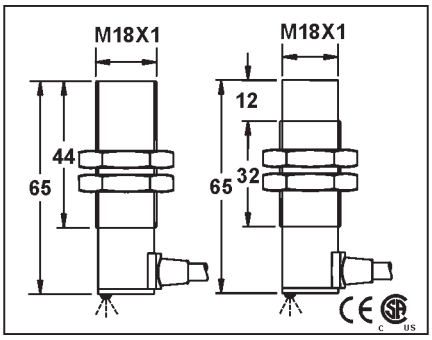

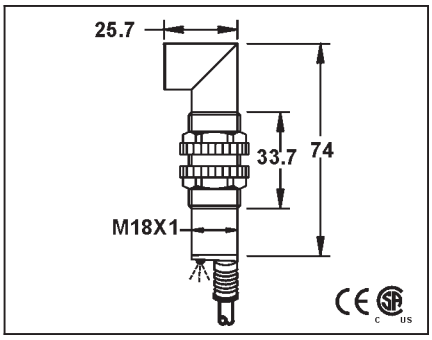

20-250VAC	20-250VAC	20-250VAC
-	-	-
<1.8mA	<1.8mA	<1.8mA
400mA	400mA	400mA
<1.8mA	<1.8mA	<1.8mA
5A(20ms)	5A(20ms)	5A(20ms)
5mA	5mA	5mA
<8VAC AT 400MA	<8VAC AT 400MA	<8VAC AT 400MA
<25HZ	<25HZ	<25HZ
10ms/10ms	10ms/10ms	10ms/10ms
<15%(Sr)	<15%(Sr)	<15%(Sr)
<1.0%(Sr)	<1.0%(Sr)	<1.0%(Sr)
IP67	IP67	IP67
-25°C - +70°C	-25°C - +70°C	-25°C - +70°C
<10%(Sr)	<10%(Sr)	<10%(Sr)
NO	NO	NO
-	-	-
-	-	-
RFI>3V/m / EFT>1KV / ESD>4KV (contact)	RFI>3V/m / EFT>1KV / ESD>4KV (contact)	RFI>3V/m / EFT>1KV / ESD>4KV (contact)
IEC 60947-5-2,Part 7.4.1 / IEC 60947-5-2,Part 7.4.2	IEC 60947-5-2,Part 7.4.1 / IEC 60947-5-2,Part 7.4.2	IEC 60947-5-2,Part 7.4.1 / IEC 60947-5-2,Part 7.4.2
PBT	PBT	PBT

FCM1-1805A-A3L2	11	FCM2-1808A-A3L2	FCM1-1805A-A3L2Y	11	FCM2-1808A-A3L2Y	FCM1-1805A-A3L2Z	11	FCM2-1808A-A3L2Z
FCM1-1805A-B3L2	12	FCM2-1808A-B3L2	FCM1-1805A-B3L2Y	12	FCM2-1808A-B3L2Y	FCM1-1805A-B3L2Z	12	FCM2-1808A-B3L2Z
FCM1-1805A-C5L2	14	FCM2-1808A-C5L2	FCM1-1805A-C5L2Y	14	FCM2-1808A-C5L2Y	FCM1-1805A-C5L2Z	14	FCM2-1808A-C5L2Z

5.0 ϕ44x0.1		5.0 ϕ44x0.1		5.0 ϕ44x0.1	
Approx.161 g	Approx.160 g	Approx.161 g	Approx.160 g	Approx.161 g	Approx.160 g

AC INDUCTIVE PROXIMITY SWITCH

M 30		Q25x50x10
●	○	●
10 mm	15 mm	5 mm
stainless steel or nickel plated brass		die-cast
●		●

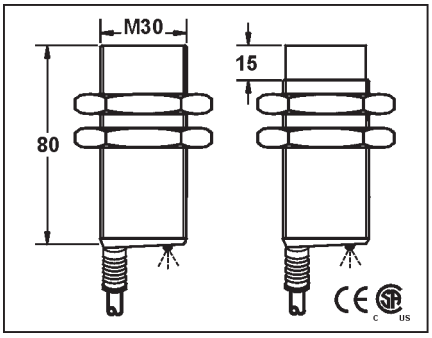

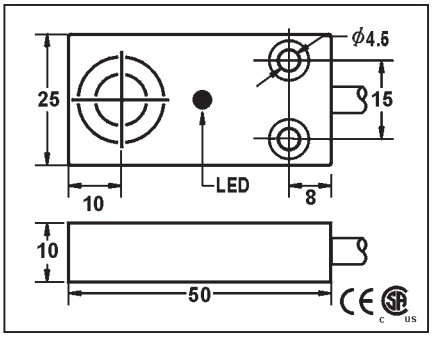

20-250VAC	20-250VAC
-	-
<1.8mA	<1.8mA
400mA	400mA
<1.8mA	<1.8mA
5A(20ms)	5A(20ms)
5mA	5mA
<8VAC at 400MA	<8VAC at 400MA
<25HZ	<25HZ
10ms/10ms	10ms/10ms
<15%(Sr)	<15%(Sr)
<1.0%(Sr)	<1.0%(Sr)
IP67	IP67
-25 °C - +70 °C	-25 °C - +70 °C
<10%(Sr)	<10%(Sr)
NO	NO
-	-
-	-
RFI>3V/m / EFT>1KV / ESD>4KV (contact)	RFI>3V/m / EFT>1KV / ESD>4KV (contact)
IEC 60947-5-2,Part 7.4.1 / IEC 60947-5-2,Part 7.4.2	IEC 60947-5-2,Part 7.4.1 / IEC 60947-5-2,Part 7.4.2
PBT	PBT

FCM1-3010A-A3L2	11	FCM2-3015A-A3L2	FQM1-2505A-A2L2	11
FCM1-3010A-B3L2	12	FCM2-3015A-B3L2	FQM1-2505A-B2L2	12
FCM1-3010A-C5L2	14	FCM2-3015A-C5L2		

5.8ϕ3x0.5(6.8ϕ5x0.5)		4ϕ3x0.3 4
Approx.247 g	Approx.237 g	Approx.100 g

AC INDUCTIVE SHORT FORM PROXIMITY SWITCH

M 18		M 30	
●	○	●	○
5 mm	8 mm	10 mm	15 mm
stainless steel or nickel plated brass		stainless steel or nickel plated brass	
●		●	

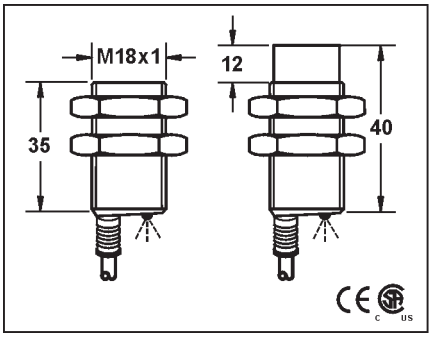

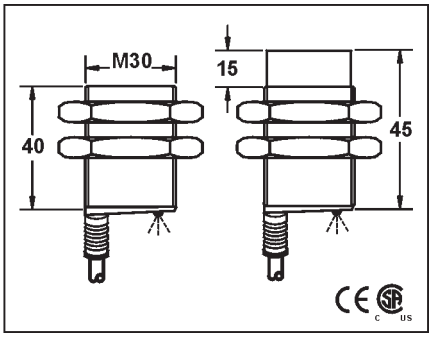

20-250VAC	20-250VAC
-	-
<1.8mA	<1.8mA
400mA	400mA
<1.8mA	<1.8mA
5A(20ms)	5A(20ms)
5mA	5mA
<8VAC at 400mA	<8VAC at 400MA
<25HZ	<25HZ
10ms/10ms	10ms/10ms
<15%(Sr)	<15%(Sr)
<1.0%(Sr)	<1.0%(Sr)
IP67	IP67
-25°C - +70°C	-25°C - +70°C
<10%(Sr)	<10%(Sr)
NO	NO
-	-
-	-
RFI>3V/m / EFT>1KV / ESD>4KV (contact)	RFI>3V/m / EFT>1KV / ESD>4KV (contact)
IEC 60947-5-2,Part 7.4.1 / IEC 60947-5-2,Part 7.4.2	IEC 60947-5-2,Part 7.4.1 / IEC 60947-5-2,Part 7.4.2
-	-

FCM1-1805A-A3S2	11	FCM2-1808A-A3S2	FCM1-3010A-A3S2	11	FCM2-3015A-A3S2
FCM1-1805A-B3S2	12	FCM2-1808A-B3S2	FCM1-3010A-B3S2	12	FCM2-3015A-B3S2

5.0 ϕ 44x0.1	5.8 ϕ 3x0.5
Approx.156 g / Approx.146 g	Approx.209 g / Approx.208 g

AC INDUCTIVE PLASTIC HOUSING PROXIMITY SWITCH

M 12		M 12		M 12	
●	○	●	○	●	○
2 mm	4 mm	2 mm	4 mm	2 mm	4 mm
PBT RESIN		PBT RESIN		PBT RESIN	
●		●		●	

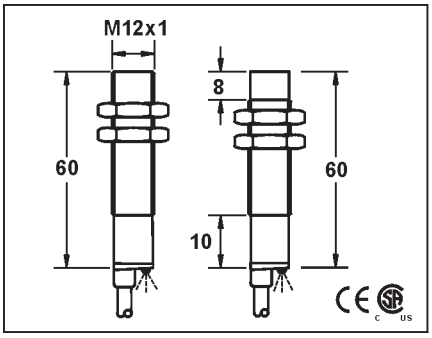

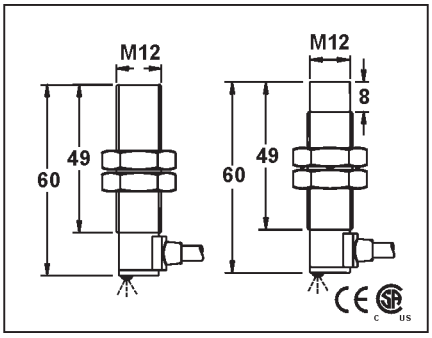

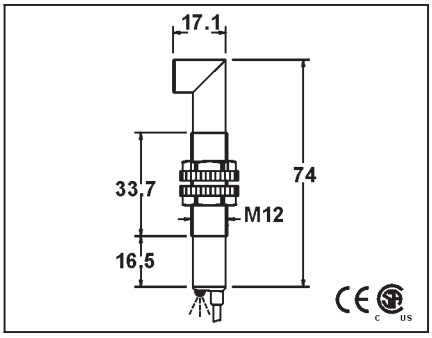

20-250VAC	20-250VAC	20-250VAC
-	-	-
<1.8mA	<1.8mA	<1.8mA
400mA	400mA	400mA
<1.8mA	<1.8mA	<1.8mA
5A(20ms)	5A(20ms)	5A(20ms)
5mA	5mA	5mA
<8VAC at 400mA	<8VAC at 400MA	<8VAC at 400MA
<25HZ	<25HZ	<25HZ
10ms/10ms	10ms/10ms	10ms/10ms
<15%(Sr)	<15%(Sr)	<15%(Sr)
<1.0%(Sr)	<1.0%(Sr)	<1.0%(Sr)
IP67	IP67	IP67
-25 °C - +70 °C	-25 °C - +70 °C	-25 °C - +70 °C
<10%(Sr)	<10%(Sr)	<10%(Sr)
NO	NO	NO
-	-	-
-	-	-
RFI>3V/m / EFT>1KV / ESD>4KV (contact)	RFI>3V/m / EFT>1KV / ESD>4KV (contact)	RFI>3V/m / EFT>1KV / ESD>4KV (contact)
IEC 60947-5-2,Part 7.4.1 / IEC 60947-5-2,Part 7.4.2	IEC 60947-5-2,Part 7.4.1 / IEC 60947-5-2,Part 7.4.2	IEC 60947-5-2,Part 7.4.1 / IEC 60947-5-2,Part 7.4.2
POM / PBT	POM / PBT	POM

FCP1-1202A-A2L2	9	FCP2-1204A-A2L2	FCP1-1202A-A2L2Y	9	FCP2-1204A-A2L2Y	FCP1-1202A-A2L2Z	9	FCP2-1204A-A2L2Z
FCP1-1202A-B2L2	10	FCP2-1204A-B2L2	FCP1-1202A-B2L2Y	10	FCP2-1204A-B2L2Y	FCP1-1202A-B2L2Z	10	FCP2-1204A-B2L2Z

4ϕ2x0.34	4ϕ2x0.34	4ϕ2x0.34
Approx.68 g	Approx.68 g	Approx.77 g

AC INDUCTIVE PLASTIC HOUSING PROXIMITY SWITCH

M 18			M 18			M 18		
●	○		●	○		●	○	
5 mm	8 mm		5 mm	8 mm		5 mm	8 mm	
PBT RESIN			PBT RESIN			PBT RESIN		
●			●			●		
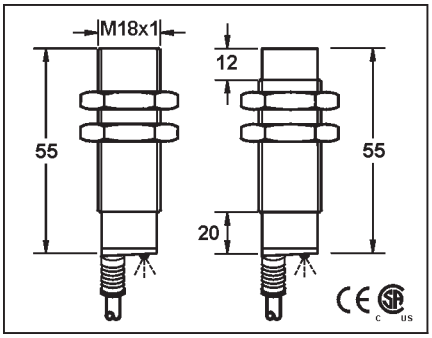			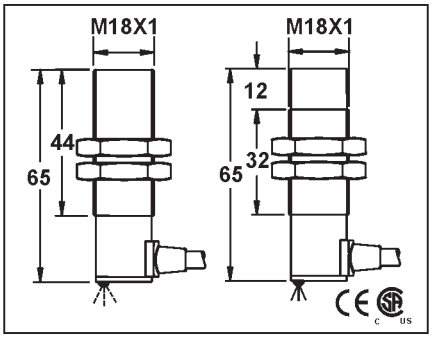			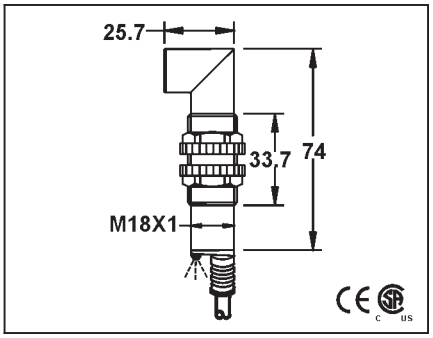		
20-250VAC			20-250VAC			20-250VAC		
-			-			-		
<1.8mA			<1.8mA			<1.8mA		
400mA			400mA			400mA		
<1.8mA			<1.8mA			<1.8mA		
5A(20ms)			5A(20ms)			5A(20ms)		
5mA			5mA			5mA		
<8VAC at 400mA			<8VAC at 400mA			<8VAC at 400mA		
<25HZ			<25HZ			<25HZ		
10ms/10ms			10ms/10ms			10ms/10ms		
<15%(Sr)			<15%(Sr)			<15%(Sr)		
<1.0%(Sr)			<1.0%(Sr)			<1.0%(Sr)		
IP67			IP67			IP67		
-25 °C - +70 °C			-25 °C - +70 °C			-25 °C - +70 °C		
<10%(Sr)			<10%(Sr)			<10%(Sr)		
NO			NO			NO		
-			-			-		
-			-			-		
RFI>3V/m / EFT>1KV / ESD>4KV (contact)			RFI>3V/m / EFT>1KV / ESD>4KV (contact)			RFI>3V/m / EFT>1KV / ESD>4KV (contact)		
IEC 60947-5-2,Part 7.4.1 / IEC 60947-5-2,Part 7.4.2			IEC 60947-5-2,Part 7.4.1 / IEC 60947-5-2,Part 7.4.2			IEC 60947-5-2,Part 7.4.1 / IEC 60947-5-2,Part 7.4.2		
PBT			PBT			PBT		
FCP1-1805A-A2L2	9	FCP2-1808A-A2L2	FCP1-1805A-A2L2Y	9	FCP2-1808A-A2L2Y	FCP1-1805A-A2L2Z	11	FCP2-1808A-A2L2Z
FCP1-1805A-B2L2	10	FCP2-1808A-B2L2	FCP1-1805A-B2L2Y	10	FCP2-1808A-B2L2Y	FCP1-1805A-B2L2Z	12	FCP2-1808A-B2L2Z
FCP1-1805A-C4L2	14	FCP2-1808A-C4L2	FCP1-1805A-C4L2Y	14	FCP2-1808A-C4L2Y	FCP1-1805A-C4L2Z	14	FCP2-1808A-C4L2Z
5.0φ44x0.1			5.0φ44x0.1			5.0φ44x0.1		
Approx.124 g			Approx.124 g			Approx.124 g		

AC INDUCTIVE PLASTIC H0USING PROXIMITY SWITCH

ϕ20		M 30		ϕ34	
●	○	●	○	●	○
5 mm	8 mm	10 mm	15 mm	15 mm	20 mm
PBT RESIN		PBT RESIN		PBT RESIN	
●		●		●	

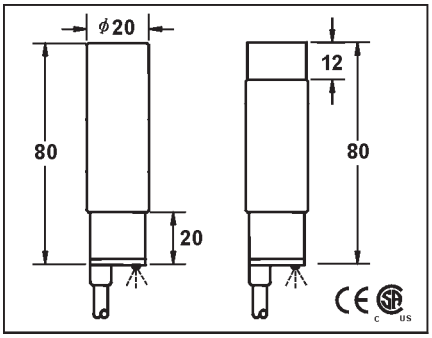

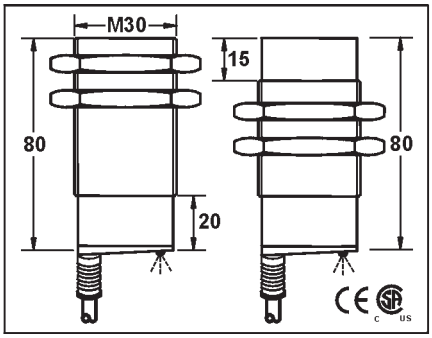

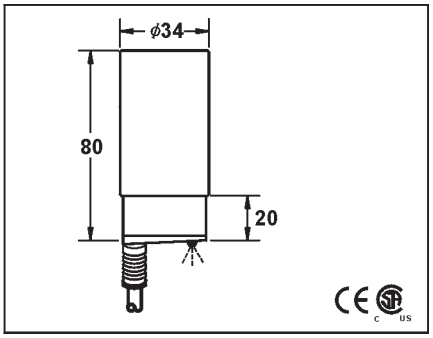

20-250VAC			20-250VAC			20-250VAC		
-			-			-		
<1.8mA			<1.8mA			<1.8mA		
400mA			400mA			400mA		
<1.8mA			<1.8mA			<1.8mA		
5A(20ms)			5A(20ms)			5A(20ms)		
5mA			5mA			5mA		
<8VAC AT 400MA			<8VAC AT 400MA			<8VAC AT 400MA		
<25HZ			<25HZ			<25HZ		
10ms/10ms			10ms/10ms			10ms/10ms		
<15%(Sr)			<15%(Sr)			<15%(Sr)		
<1.0%(Sr)			<1.0%(Sr)			<1.0%(Sr)		
IP67			IP67			IP67		
-25°C - +70°C			-25°C - +70°C			-25°C - +70°C		
<10%(Sr)			<10%(Sr)			<10%(Sr)		
NO			NO			NO		
-			-			-		
-			-			-		
RFI>3V/m / EFT>1KV / ESD>4KV (contact)			RFI>3V/m / EFT>1KV / ESD>4KV (contact)			RFI>3V/m / EFT>1KV / ESD>4KV (contact)		
IEC 60947-5-2,Part 7.4.1 / IEC 60947-5-2,Part 7.4.2			IEC 60947-5-2,Part 7.4.1 / IEC 60947-5-2,Part 7.4.2			IEC 60947-5-2,Part 7.4.1 / IEC 60947-5-2,Part 7.4.2		
PBT			PBT			PBT		
FCP1-D2005A-A2L2	9	FCP2-D2008A-A2L2	FCP1-3010A-A2L2	9	FCP2-3015A-A2L2	FCP1-D3415A-A2L2	9	FCP2-D3420A-A2L2
FCP1-D2005A-B2L2	10	FCP2-D2008A-B2L2	FCP1-3010A-B2L2	10	FCP2-3015A-B2L2	FCP1-D3415A-B2L2	10	FCP2-D3420A-B2L2
FCP1-D2005A-S4L2	14	FCP2-D2008A-S4L2	FCP1-3010A-S4L2	14	FCP2-3015A-S4L2	FCP1-D3415A-S4L2	14	FCP2-D3420A-S4L2
5.8ϕ2x0.5			5.8ϕ2x0.5			5.8 ϕ2x0.5(5.8ϕ4x0.5)		
Approx.153 g			Approx.187 g			Approx.199 g		

AC INDUCTIVE PROXIMITY SWITCH CONNECTOR TYPE

ϕ11		M 12		M 18	
●	○	●	○	●	○
2 mm	4 mm	2 mm	4 mm	5 mm	8 mm
stainless steel or nickel plated brass		stainless steel or nickel plated brass		stainless steel or nickel plated brass	
●		●		●	

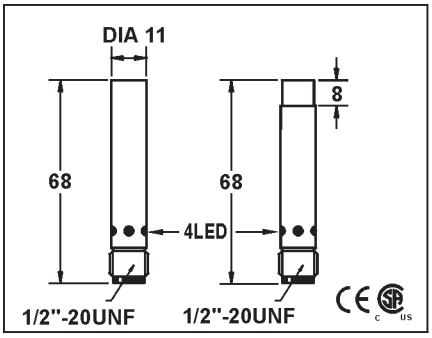

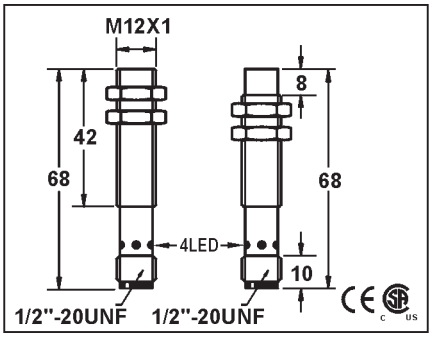

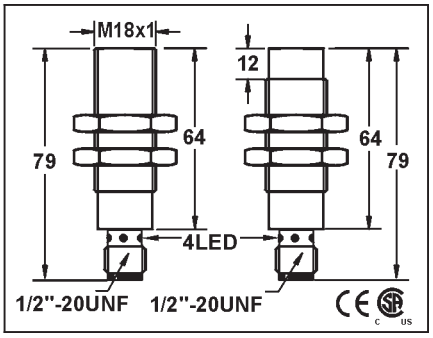

20-250VAC			20-250VAC			20-250VAC	
-			-			-	
<1.8mA			<1.8mA			<1.8mA	
400mA			400mA			400mA	
<1.8mA			<1.8mA			<1.8mA	
5A(20ms)			5A(20ms)			5A(20ms)	
5mA			5mA			5mA	
<8VAC at 200mA			<8VAC at 400MA			<8VAC at 200mA	
<25HZ			<25HZ			<25HZ	
10ms/10ms			10ms/10ms			10ms/10ms	
<15%(Sr)			<15%(Sr)			<15%(Sr)	
<1.0%(Sr)			<1.0%(Sr)			<1.0%(Sr)	
IP67			IP67			IP67	
-25°C - +70°C			-25°C - +70°C			-25°C - +70°C	
<10%(Sr)			<10%(Sr)			<10%(Sr)	
NO			NO			NO	
-			-			-	
-			-			-	
RFI>3V/m / EFT>1KV / ESD>4KV (contact)			RFI>3V/m / EFT>1KV / ESD>4KV (contact)			RFI>3V/m / EFT>1KV / ESD>4KV (contact)	
IEC 60947-5-2,Part 7.4.1 / IEC 60947-5-2,Part 7.4.2			IEC 60947-5-2,Part 7.4.1 / IEC 60947-5-2,Part 7.4.2			IEC 60947-5-2,Part 7.4.1 / IEC 60947-5-2,Part 7.4.2	
PBT			POM		PBT	PBT	
FCM1-D1102A-AUL3	52	FCM2-D1104A-AUL3	FCM1-1202A-AUL3	52	FCM2-1204A-AUL3	FCM1-1805A-AUL3	52	FCM2-1808A-AUL3
FCM1-D1102A-BUL3	52	FCM2-D1104A-BUL3	FCM1-1202A-BUL3	52	FCM2-1204A-BUL3	FCM1-1805A-BUL3	52	FCM2-1808A-BUL3
						FCM1-1805A-CUL5	56	FCM2-1808A-CUL5
SCREW THREAD TYPE SEE PAGE (9)								
Approx.30 g		Approx.29 g	Approx.31 g		Approx.30 g	Approx.69 g		Approx.68 g

AC INDUCTIVE PROXIMITY SWITCH CONNECTOR TYPE

M 18			M 18			M 18		
●	○		●	○		●	○	
5 mm	8 mm		5 mm	8 mm		5 mm	8 mm	
stainless steel or nickel plated brass			stainless steel or nickel plated brass			stainless steel or nickel plated brass		
●			●			●		
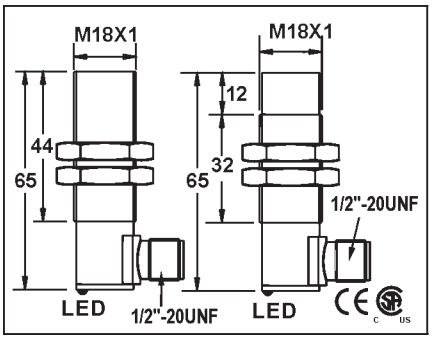			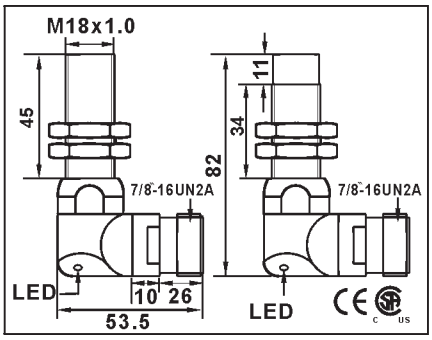			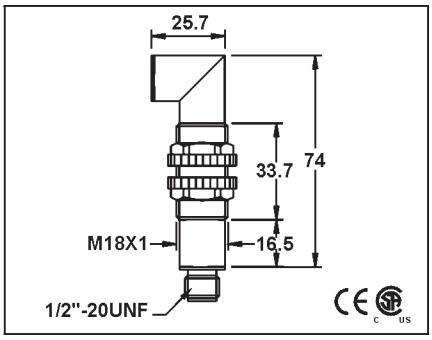		
20-250VAC			20-250VAC			20-250VAC		
-			-			-		
<1.8mA			<1.8mA			<1.8mA		
400mA			400mA			400mA		
<1.8mA			<1.8mA			<1.8mA		
5A(20ms)			5A(20ms)			5A(20ms)		
5mA			5mA			5mA		
<8VAC AT 400MA			<8VAC AT 400MA			<8VAC AT 400MA		
<25HZ			<25HZ			<25HZ		
10ms/10ms			10ms/10ms			10ms/10ms		
<15%(Sr)			<15%(Sr)			<15%(Sr)		
<1.0%(Sr)			<1.0%(Sr)			<1.0%(Sr)		
IP67			IP67			IP67		
-25°C - +70°C			-25°C - +70°C			-25°C - +70°C		
<10%(Sr)			<10%(Sr)			<10%(Sr)		
NO			NO			NO		
-			-			-		
-			-			-		
RFI>3V/m / EFT>1KV / ESD>4KV (contact)			RFI>3V/m / EFT>1KV / ESD>4KV (contact)			RFI>3V/m / EFT>1KV / ESD>4KV (contact)		
IEC 60947-5-2,Part 7.4.1 / IEC 60947-5-2,Part 7.4.2			IEC 60947-5-2,Part 7.4.1 / IEC 60947-5-2,Part 7.4.2			IEC 60947-5-2,Part 7.4.1 / IEC 60947-5-2,Part 7.4.2		
PBT			PBT			PBT		
FCM1-1805A-AUL3Y	52	FCM2-1808A-AUL3Y	FCM1-1805A-AZL3Y	52	FCM2-1808A-AZL3Y	FCM1-1805A-AUL3Z	52	FCM2-1808A-AUL3Z
FCM1-1805A-BUL3Y	52	FCM2-1808A-BUL3Y	FCM1-1805A-BZL3Y	52	FCM2-1808A-BZL3Y	FCM1-1805A-BUL3Z	52	FCM2-1808A-BUL3Z
FCM1-1805A-AUL5Y	56	FCM2-1808A-AUL5Y	FCM1-1805A-AZL5Y	56	FCM2-1808A-AZL5Y	FCM1-1805A-AUL5Z	56	FCM2-1808A-AUL5Z
			FCM*-*****-*Z**Y Z= 7/8"-16UN2A U=1/2"-20UNF					
Approx.69 g	Approx.68 g		Approx.251 g	Approx.283 g		Approx.69 g	Approx.68 g	

AC INDUCTIVE PROXIMITY SWITCH CONNECTOR TYPE

M 30			M 30			M 30		
●	○		●	○		●	○	
10 mm	15 mm		10 mm	15 mm		10 mm	15 mm	
stainless steel or nickel plated brass			stainless steel or nickel plated brass			stainless steel or nickel plated brass		
●			●			●		
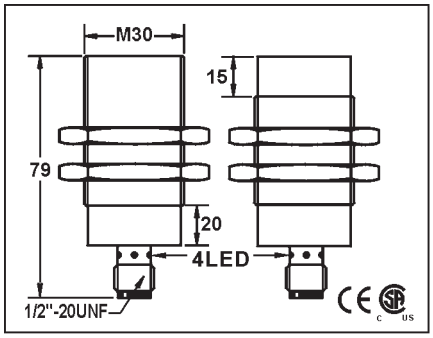			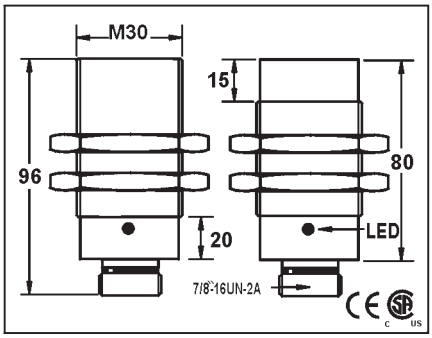			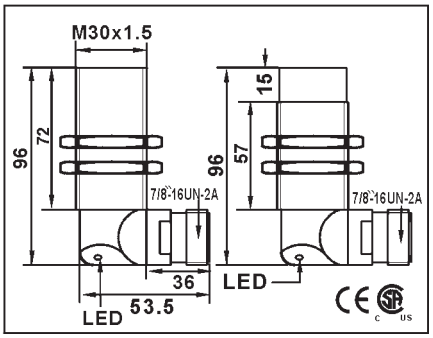		
20-250VAC			20-250VAC			20-250VAC		
-			-			-		
<1.8mA			<1.8mA			<1.8mA		
400mA			400mA			400mA		
<1.8mA			<1.8mA			<1.8mA		
5A(20ms)			5A(20ms)			5A(20ms)		
5mA			5mA			5mA		
<8VAC AT 400MA			<8VAC AT 400MA			<8VAC AT 400MA		
<25HZ			<25HZ			<25HZ		
10ms/10ms			10ms/10ms			10ms/10ms		
<15%(Sr)			<15%(Sr)			<15%(Sr)		
<1.0%(Sr)			<1.0%(Sr)			<1.0%(Sr)		
IP67			IP67			IP67		
-25°C - +70°C			-25°C - +70°C			-25°C - +70°C		
<10%(Sr)			<10%(Sr)			<10%(Sr)		
NO			NO			NO		
-			-			-		
-			-			-		
RFI>3V/m / EFT>1KV / ESD>4KV (contact)			RFI>3V/m / EFT>1KV / ESD>4KV (contact)			RFI>3V/m / EFT>1KV / ESD>4KV (contact)		
IEC 60947-5-2,Part 7.4.1 / IEC 60947-5-2,Part 7.4.2			IEC 60947-5-2,Part 7.4.1 / IEC 60947-5-2,Part 7.4.2			IEC 60947-5-2,Part 7.4.1 / IEC 60947-5-2,Part 7.4.2		
PBT			PBT			PBT		
FCM1-3010A-AUL3	52	FCM2-3015A-AUL3	FCM1-3010A-AZL3	61	FCM2-3015A-AZL3	FCM1-3010A-AZL3Y	61	FCM2-3015A-AZL3Y
FCM1-3010A-BUL3	52	FCM2-3015A-BUL3	FCM1-3010A-BZL3	61	FCM2-3015A-BZL3	FCM1-3010A-BZL3Y	61	FCM2-3015A-BZL3Y
FCM1-3010A-CUL5	56	FCM2-3015A-CUL5	FCM1-3010A-CZL5	63	FCM2-3015A-CZL5	FCM1-3010A-CZL5Y	63	FCM2-3015A-CZL5Y
						FCM*-*****-*Z**Y Z= 7/8"-16UN2A U=1/2"-20UNF		
Approx.147 g		Approx.137 g	Approx.187 g		Approx.179 g	Approx.311 g		Approx.356 g

AC INDUCTIVE PLASTIC HOUSING PROXIMITY SWITCH CONNECTOR TYPE

M 12		M 18		M 18	
●	○	●	○	●	○
2 mm	4 mm	5 mm	8 mm	5 mm	8 mm
PBT RESIN		PBT RESIN		PBT RESIN	
●		●		●	

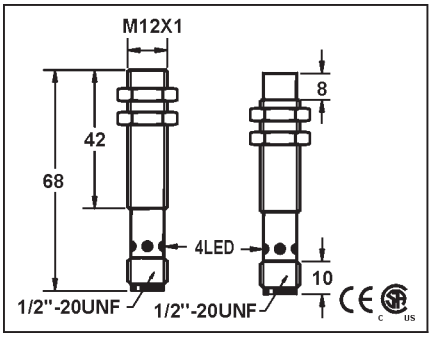

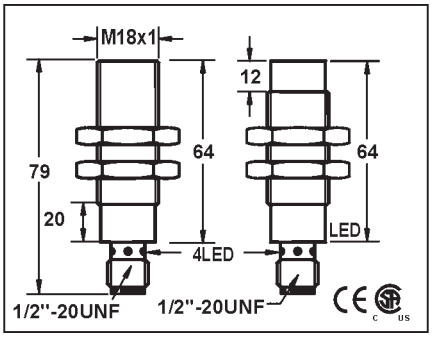

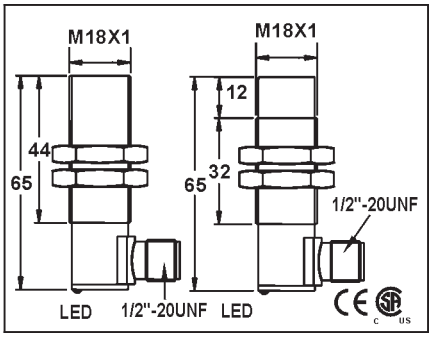

20-250VAC			20-250VAC			20-250VAC	
-			-			-	
<1.8mA			<1.8mA			<1.8mA	
400mA			400mA			400mA	
<1.8mA			<1.8mA			<1.8mA	
5A(20ms)			5A(20ms)			5A(20ms)	
5mA			5mA			5mA	
<8VAC AT 400MA			<8VAC AT 400MA			<8VAC AT 400MA	
<25HZ			<25HZ			<25HZ	
10ms/10ms			10ms/10ms			10ms/10ms	
<15%(Sr)			<15%(Sr)			<15%(Sr)	
<1.0%(Sr)			<1.0%(Sr)			<1.0%(Sr)	
IP67			IP67			IP67	
-25 °C - +70 °C			-25 °C - +70 °C			-25 °C - +70 °C	
<10%(Sr)			<10%(Sr)			<10%(Sr)	
NO			NO			NO	
-			-			-	
-			-			-	
RFI>3V/m / EFT>1KV / ESD>4KV (contact)			RFI>3V/m / EFT>1KV / ESD>4KV (contact)			RFI>3V/m / EFT>1KV / ESD>4KV (contact)	
IEC 60947-5-2,Part 7.4.1 / IEC 60947-5-2,Part 7.4.2			IEC 60947-5-2,Part 7.4.1 / IEC 60947-5-2,Part 7.4.2			IEC 60947-5-2,Part 7.4.1 / IEC 60947-5-2,Part 7.4.2	
POM		PBT	PBT			PBT	
FCP1-1202A-AUL3	54	FCP2-1204A-AUL3	FCP1-1805A-AUL3	54	FCP2-1808A-AUL3	FCP1-1805A-AUL3Y	54	FCP2-1808A-AUL3Y
FCP1-1202A-BUL3	54	FCP2-1204A-BUL3	FCP1-1805A-BUL3	54	FCP2-1808A-BUL3	FCP1-1805A-BUL3Y	54	FCP2-1808A-BUL3Y
			FCP1-1805A-BUL5	58	FCP2-1808A-BUL5	FCP1-1805A-BUL5Y	58	FCP2-1808A-BUL5Y
Approx.14 g			Approx.80 g			Approx.80 g	

AC INDUCTIVE PLASTIC HOUSING PROXIMITY SWITCH CONNECTOR TYPE

M 18			ϕ 20			M 30		
●	○		●	○		●	○	
5 mm	8 mm		8 mm	12 mm		10 mm	15 mm	
PBT RESIN			PBT RESIN			PBT RESIN		
●			●			●		
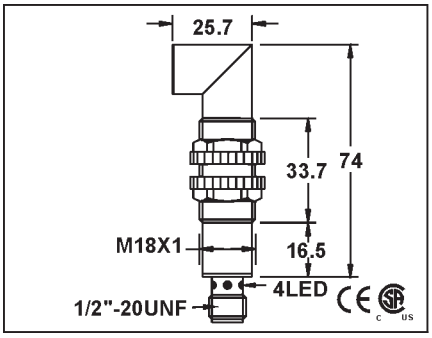			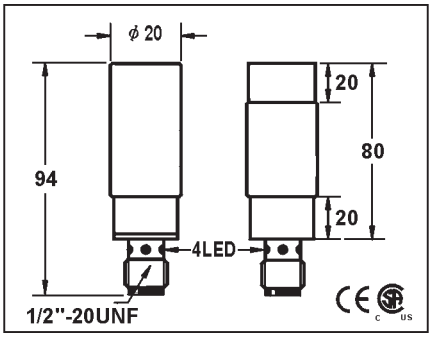			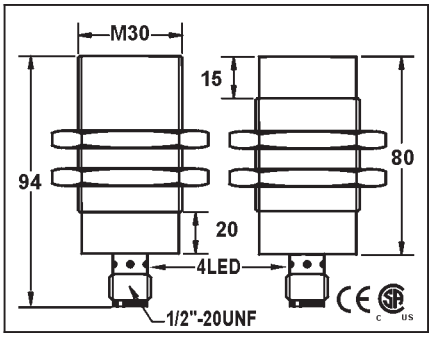		
20-250VAC			20-250VAC			20-250VAC		
-			-			-		
<1.8mA			<1.8mA			<1.8mA		
400mA			400mA			400mA		
<1.8mA			<1.8mA			<1.8mA		
5A(20ms)			5A(20ms)			5A(20ms)		
5mA			5mA			5mA		
<8VAC AT 400MA			<8VAC AT 400MA			<8VAC AT 400MA		
<25HZ			<25HZ			<25HZ		
10ms/10ms			10ms/10ms			10ms/10ms		
<15%(Sr)			<15%(Sr)			<15%(Sr)		
<1.0%(Sr)			<1.0%(Sr)			<1.0%(Sr)		
IP67			IP67			IP67		
-25°C - +70°C			-25°C - +70°C			-25°C - +70°C		
<10%(Sr)			<10%(Sr)			<10%(Sr)		
NO			NO			NO		
-			-			-		
-			-			-		
RFI>3V/m / EFT>1KV / ESD>4KV (contact)			RFI>3V/m / EFT>1KV / ESD>4KV (contact)			RFI>3V/m / EFT>1KV / ESD>4KV (contact)		
IEC 60947-5-2,Part 7.4.1 / IEC 60947-5-2,Part 7.4.2			IEC 60947-5-2,Part 7.4.1 / IEC 60947-5-2,Part 7.4.2			IEC 60947-5-2,Part 7.4.1 / IEC 60947-5-2,Part 7.4.2		
PBT			PBT			PBT		
FCP1-1805A-AUL3Z	54	FCP2-1808A-AUL3Z	FCP1-D2008A-AUL3	54	FCP2-D2012A-AUL3	FCP1-3010A-AUL3	54	FCP2-3015A-AUL3
FCP1-1805A-BUL3Z	54	FCP2-1808A-BUL3Z	FCP1-D2008A-BUL3	54	FCP2-D2012A-BUL3	FCP1-3010A-BUL3	54	FCP2-3015A-BUL3
FCP1-1805A-BUL5Z	58	FCP2-1808A-BUL5Z	FCP1-D2008A-BUL5	58	FCP2-D2012A-BUL5	FCP1-3010A-BUL5	58	FCP2-3015A-BUL5
Approx.14 g			Approx.90 g			Approx.120 g		

AC INDUCTIVE PLASTIC HOUSING PROXIMITY SWITCH CONNECTOR TYPE

M 30			ϕ34			ϕ34		
●	○		●	○		●	○	
10 mm	15 mm		15 mm	20 mm		15 mm	20 mm	
PBT RESIN			PBT RESIN			PBT RESIN		
●			●			●		
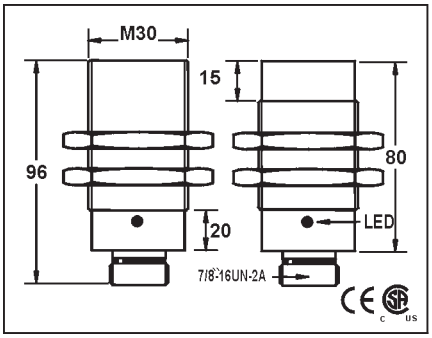			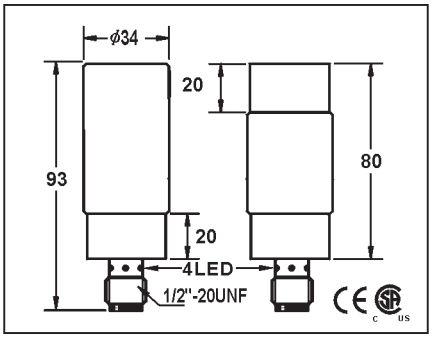			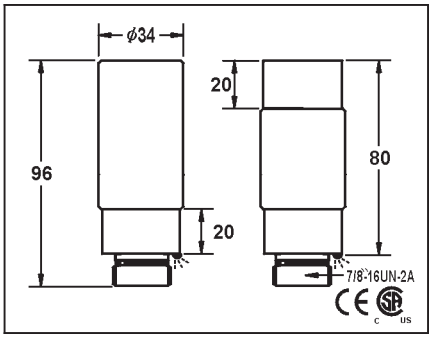		
20-250VAC			20-250VAC			20-250VAC		
-			-			-		
<1.8mA			<1.8mA			<1.8mA		
400mA			400mA			400mA		
<1.8mA			<1.8mA			<1.8mA		
5A(20ms)			5A(20ms)			5A(20ms)		
5mA			5mA			5mA		
<8VAC AT 400MA			<8VAC AT 400MA			<8VAC AT 400MA		
<25HZ			<25HZ			<25HZ		
10ms/10ms			10ms/10ms			10ms/10ms		
<15%(Sr)			<15%(Sr)			<15%(Sr)		
<1.0%(Sr)			<1.0%(Sr)			<1.0%(Sr)		
IP67			IP67			IP67		
-25°C - +70°C			-25°C - +70°C			-25°C - +70°C		
<10%(Sr)			<10%(Sr)			<10%(Sr)		
NO			NO			NO		
-			-			-		
-			-			-		
RFI>3V/m / EFT>1KV / ESD>4KV (contact)			RFI>3V/m / EFT>1KV / ESD>4KV (contact)			RFI>3V/m / EFT>1KV / ESD>4KV (contact)		
IEC 60947-5-2,Part 7.4.1 / IEC 60947-5-2,Part 7.4.2			IEC 60947-5-2,Part 7.4.1 / IEC 60947-5-2,Part 7.4.2			IEC 60947-5-2,Part 7.4.1 / IEC 60947-5-2,Part 7.4.2		
PBT			PBT			PBT		
FCP1-3010A-AZL2	62	FCP2-3015A-AZL2	FCP1-D3415A-AUL3	54	FCP2-D3420A-AUL3	FCP1-D3415A-AZL2	62	FCP2-D3420A-AZL2
FCP1-3010A-BZL2	62	FCP2-3015A-BZL2	FCP1-D3415A-BUL3	54	FCP2-D3420A-BUL3	FCP1-D3415A-BZL2	62	FCP2-D3420A-BZL2
FCP1-3010A-BZL4	65	FCP2-3015A-BZL4	FCP1-D3415A-BUL5	58	FCP2-D3420A-BUL5	FCP1-D3415A-BZL4	65	FCP2-D3420A-BZL4
Approx.120 g			Approx.162 g			Approx.162 g		