PART E-01 ~ E-12

Diameter
● Shielded ○ non-Shielded
Switching Distance Sn mm
Housing Material
● With LED ○ Without LED

Dimensions (unit: mm)

Operating Voltage
Ripple
No Load Current
Max. Load Current
Leakge Current
Surge Current
Min. Load Current
Voltage Drop
Switching Frequency
Response Time
Switching Hysteresis
Repeat Accuracy
Protection Category
Operating Temperature
Temperature Drift
Short Circuit Protection
Overload Trip Point
Time Delay Before Availability
EMC
Shock / Vibration
Material Active Face

DC 3 wire 10-30V NPN N.O.
DC 3 wire 10-30V NPN N.C.
DC 3 wire 10-30V PNP N.O.
DC 3 wire 10-30V PNP N.C.
DC 4 wire 10-30V Changeover PNP (N.O. & N.C.)
DC 4 wire 10-30V Changeover NPN (N.O. & N.C.)
DC 2 wire 10-60V N.O.
DC 2 wire 10-60V N.C.
DC 3 wire 10-55v NPN N.O. or NAMUR
DC 3 wire 10-55v NPN N.C.
DC 3 wire 10-55v PNP N.O.
DC 3 wire 10-55v PNP N.C.
AC 2 wire 20-250V N.O.
AC 2 wire 20-250V N.C.
AC 2 wire 20-250V N.O. or N.C. Changeable
AC/DC 2 wire 20-250V N.O.
AC/DC 2 wire 20-250V N.C.
AC/DC 2 wire 20-250V N.O. or N.C. Changeable

Remark

Cable 2M (PVC)
Weight

Please put each catalog page in the blank. The specification on the left will help your reading.

AC/DC INDUCTIVE PROXIMITY SWITCH

M 12			M 12			M 12		
●	○		●	○		●	○	
2 mm	4 mm		2 mm	4 mm		2 mm	4 mm	
stainless steel or nickel plated brass			stainless steel or nickel plated brass			stainless steel or nickel plated brass		
●			●			●		
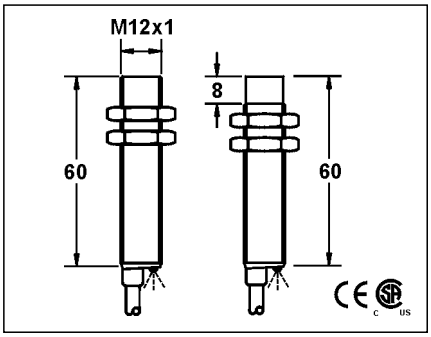			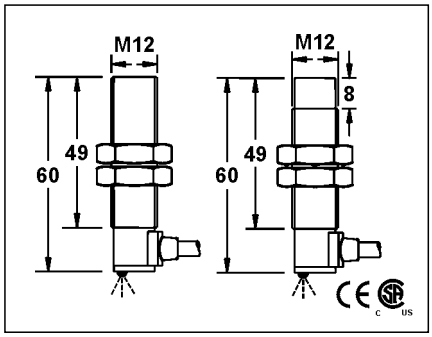			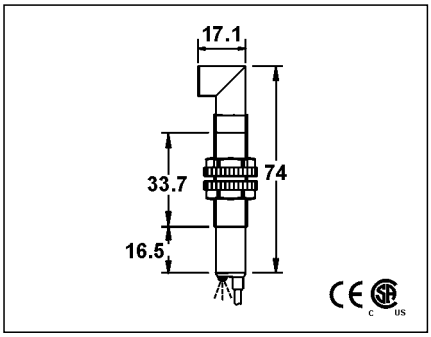		
20-250 VAC, 50-60 Hz; 20-250 VDC			20-250 VAC, 50-60 Hz; 20-250 VDC			20-250 VAC, 50-60 Hz; 20-250 VDC		
DC RIPPLE <10%			DC RIPPLE <10%			DC RIPPLE <10%		
<2.5mA			<2.5mA			<2.5mA		
100mA			100mA			100mA		
<2.5mA			<2.5mA			<2.5mA		
2.2A for 20ms			2.2A for 20ms			2.2A for 20ms		
5mA			5mA			5mA		
<=10 VAC :<=8 VDC			<=10 VAC :<=8 VDC			<=10 VAC :<=8 VDC		
25HZ AC; 40 Hz DC			25HZ AC; 40 Hz DC			25HZ AC; 40 Hz DC		
10ms/10ms			10ms/10ms			10ms/10ms		
<15%(Sr)			<15%(Sr)			<15%(Sr)		
<1.0% (Sr)			<1.0% (Sr)			<1.0% (Sr)		
IP67			IP67			IP67		
-25°C - +70°C			-25°C - +70°C			-25°C - +70°C		
<10% (Sr)			<10% (Sr)			<10% (Sr)		
YES (DC 20~30V only)			YES (DC 20~30V only)			YES (DC 20~30V only)		
-			-			-		
-			-			-		
RFI>3V/m / EFT>1KV / ESD>4KV (contact)			RFI>3V/m / EFT>1KV / ESD>4KV (contact)			RFI>3V/m / EFT>1KV / ESD>4KV (contact)		
IEC 60947-5-2,Part 7.4.1 / IEC 60947-5-2,Part 7.4.2			IEC 60947-5-2,Part 7.4.1 / IEC 60947-5-2,Part 7.4.2			IEC 60947-5-2,Part 7.4.1 / IEC 60947-5-2,Part 7.4.2		
PBT			PBT			PBT		
FCM1-1202U-A3U2	11	FCM2-1204U-A3U2	FCM1-1202U-A3U2Y	11	FCM2-1204U-A3U2Y	FCM1-1202U-A3U2Z	11	FCM2-1204U-A3U2Z
FCM1-1202U-B3U2	12	FCM2-1204U-B3U2	FCM1-1202U-B3U2Y	12	FCM2-1204U-B3U2Y	FCM1-1202U-B3U2Z	12	FCM2-1204U-B3U2Z
4ϕ3x0.34			4ϕ3x0.34			4ϕ3x0.34		
Approx.77 g	Approx.76 g		Approx.77 g	Approx.76 g		Approx.77 g	Approx.76 g	

AC/DC INDUCTIVE PROXIMITY SWITCH

M 18			M 18			M 18		
●	○		●	○		●	○	
5 mm	8 mm		5 mm	8 mm		5 mm	8 mm	
stainless steel or nickel plated brass			stainless steel or nickel plated brass			stainless steel or nickel plated brass		
●			●			●		
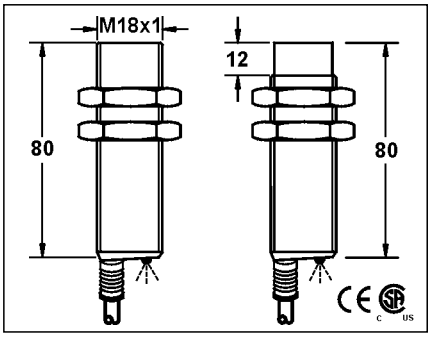			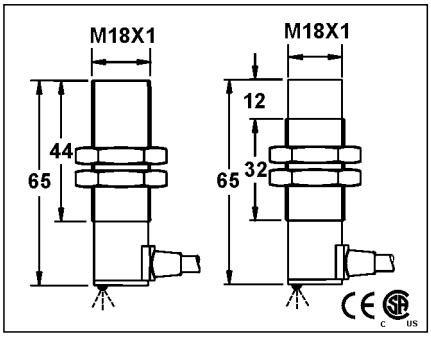			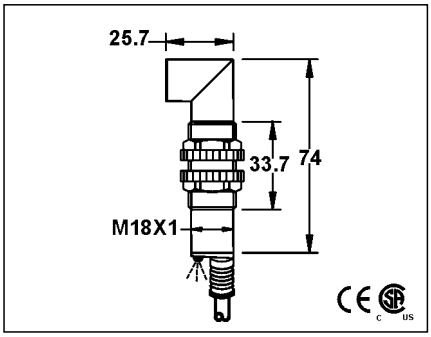		
20-250 VAC, 50-60 Hz; 20-250 VDC			20-250 VAC, 50-60 Hz; 20-250 VDC			20-250 VAC, 50-60 Hz; 20-250 VDC		
DC RIPPLE <10%			DC RIPPLE <10%			DC RIPPLE <10%		
<2.5mA			<2.5mA			<2.5mA		
200mA			200mA			200mA		
<2.5mA			<2.5mA			<2.5mA		
2.2A for 20ms			2.2A for 20ms			2.2A for 20ms		
5mA			5mA			5mA		
<=10 VAC :<=8 VDC			<=10 VAC :<=8 VDC			<=10 VAC :<=8 VDC		
25HZ AC; 40 Hz DC			25HZ AC; 40 Hz DC			25HZ AC; 40 Hz DC		
10ms/10ms			10ms/10ms			10ms/10ms		
<15%(Sr)			<15%(Sr)			<15%(Sr)		
<1.0% (Sr)			<1.0% (Sr)			<1.0% (Sr)		
IP67			IP67			IP67		
-25°C - +70°C			-25°C - +70°C			-25°C - +70°C		
<10% (Sr)			<10% (Sr)			<10% (Sr)		
YES			YES			YES		
-			-			-		
-			-			-		
RFI>3V/m / EFT>1KV / ESD>4KV (contact)			RFI>3V/m / EFT>1KV / ESD>4KV (contact)			RFI>3V/m / EFT>1KV / ESD>4KV (contact)		
IEC 60947-5-2,Part 7.4.1 / IEC 60947-5-2,Part 7.4.2			IEC 60947-5-2,Part 7.4.1 / IEC 60947-5-2,Part 7.4.2			IEC 60947-5-2,Part 7.4.1 / IEC 60947-5-2,Part 7.4.2		
PBT			PBT			PBT		
FCM1-1805U-A3U2	11	FCM2-1808U-A3U2	FCM1-1805U-A3U2Y	11	FCM2-1808U-A3U2Y	FCM1-1805U-A3U2Z	11	FCM2-1808U-A3U2Z
FCM1-1805U-B3U2	12	FCM2-1808U-B3U2	FCM1-1805U-B3U2Y	12	FCM2-1808U-B3U2Y	FCM1-1805U-B3U2Z	12	FCM2-1808U-B3U2Z
5.0φ44x0.1			5.0φ44x0.1			5.0φ44x0.1		
Approx.161 g	Approx.160 g		Approx.161 g	Approx.160 g		Approx.161 g	Approx.160 g	

AC/DC INDUCTIVE PROXIMITY SWITCH

M 30	
●	○
10 mm	15 mm
stainless steel or nickel plated brass	
●	

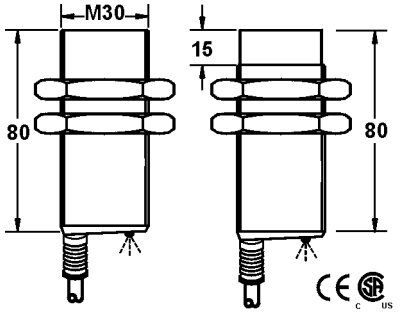

20-250 VAC, 50-60 Hz; 20-250 VDC	
DC RIPPLE <10%	
<2.5mA	
200mA	
<2.5mA	
2.2A for 20ms	
5mA	
<=10 VAC :<=8 VDC	
25HZ AC; 40 Hz DC	
10ms/10ms	
<15% (Sr)	
<1.0% (Sr)	
IP67	
-25°C - +70°C	
<10% (Sr)	
YES	
-	
-	
RFI>3V/m / EFT>1KV / ESD>4KV (contact)	
IEC 60947-5-2,Part 7.4.1 / IEC 60947-5-2,Part 7.4.2	
PBT	

FCM1-3010U-A3U2	11	FCM2-3015U-A3U2
FCM1-3010U-B3U2	12	FCM2-3015U-B3U2

5.8ϕ3x0.5(6.8ϕ5x0.5)	
Approx.247 g	Approx.237 g

AC/DC INDUCTIVE PLASTIC HOUSING PROXIMITY SWITCH

M 12		M 12		M 12	
●	○	●	○	●	○
2 mm	4 mm	2 mm	4 mm	2 mm	4 mm
PBT RESIN		PBT RESIN		PBT RESIN	
●		●		●	

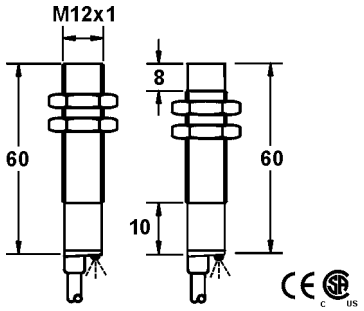

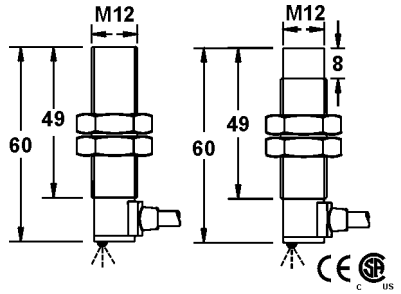

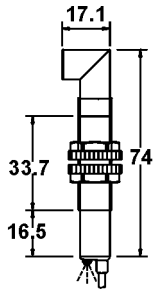

20-250 VAC, 50-60 Hz; 20-250 VDC			20-250 VAC, 50-60 Hz; 20-250 VDC			20-250 VAC, 50-60 Hz; 20-250 VDC		
DC RIPPLE <10%			DC RIPPLE <10%			DC RIPPLE <10%		
<2.5mA			<2.5mA			<2.5mA		
100mA			100mA			100mA		
<2.5mA			<2.5mA			<2.5mA		
2.2A for 20ms			2.2A for 20ms			2.2A for 20ms		
5mA			5mA			5mA		
<=10 VAC :<=8 VDC			<=10 VAC :<=8 VDC			<=10 VAC :<=8 VDC		
25HZ AC; 40 Hz DC			25HZ AC; 40 Hz DC			25HZ AC; 40 Hz DC		
10ms/10ms			10ms/10ms			10ms/10ms		
<15%(Sr)			<15% (Sr)			<15% (Sr)		
<1.0% (Sr)			<1.0% (Sr)			<1.0% (Sr)		
IP67			IP67			IP67		
-25°C - +70°C			-25°C - +70°C			-25°C - +70°C		
<10% (Sr)			<10% (Sr)			<10% (Sr)		
YES (DC 20~30V only)			YES (DC 20~30V only)			YES (DC 20~30V only)		
-			-			-		
-			-			-		
RFI>3V/m / EFT>1KV / ESD>4KV (contact)			RFI>3V/m / EFT>1KV / ESD>4KV (contact)			RFI>3V/m / EFT>1KV / ESD>4KV (contact)		
IEC 60947-5-2,Part 7.4.1 / IEC 60947-5-2,Part 7.4.2			IEC 60947-5-2,Part 7.4.1 / IEC 60947-5-2,Part 7.4.2			IEC 60947-5-2,Part 7.4.1 / IEC 60947-5-2,Part 7.4.2		
POM		PBT	POM		PBT	PBT		
FCP1-1202U-A2U2	9	FCP2-1204U-A2U2	FCP1-1202U-A2U2Y	9	FCP2-1204U-A2U2Y	FCP1-1202U-A2U2Z	9	FCP2-1204U-A2U2Z
FCP1-1202U-B2U2	10	FCP2-1204U-B2U2	FCP1-1202U-B2U2Y	10	FCP2-1204U-B2U2Y	FCP1-1202U-B2U2Z	10	FCP2-1204U-B2U2Z
4ϕ2x0.34			4ϕ2x0.34			4ϕ2x0.34		
Approx.68 g			Approx.68 g			Approx.68 g		

AC/DC INDUCTIVE PLASTIC HOUSING PROXIMITY SWITCH

M 18		M 18		M 18	
●	○	●	○	●	○
5 mm	8 mm	5 mm	8 mm	5 mm	8 mm
PBT RESIN		PBT RESIN		PBT RESIN	
●		●		●	

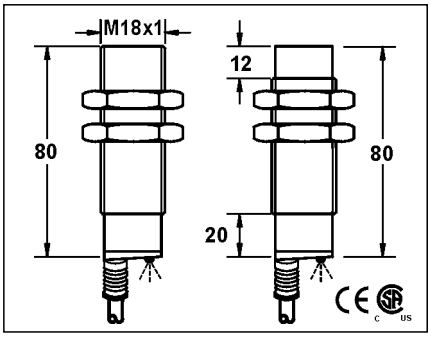

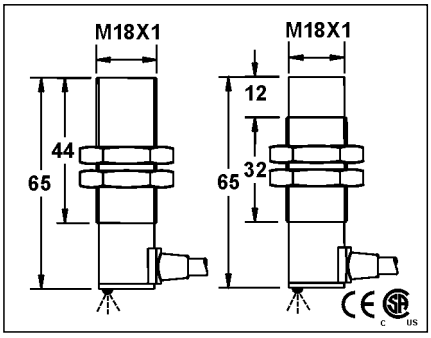

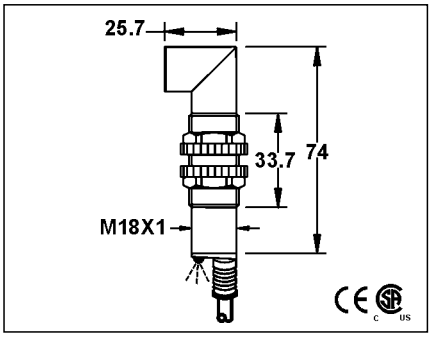

20-250 VAC, 50-60 Hz; 20-250 VDC		
DC RIPPLE <10%		
<2.5mA		
200mA		
<2.5mA		
2.2A for 20ms		
5mA		
<=10 VAC :<=8 VDC		
25HZ AC; 40 Hz DC		
10ms/10ms		
<15% (Sr)		
<1.0% (Sr)		
IP67		
-25 °C - +70 °C		
<10% (Sr)		
YES		
-		
-		
RFI>3V/m / EFT>1KV / ESD>4KV (contact)		
IEC 60947-5-2,Part 7.4.1 / IEC 60947-5-2,Part 7.4.2		
PBT		
FCP1-1805U-A2U2	9	FCP2-1808U-A2U2
FCP1-1805U-B2U2	10	FCP2-1808U-B2U2
5.0φ44x0.1		
Approx.124 g		

20-250 VAC, 50-60 Hz; 20-250 VDC		
DC RIPPLE <10%		
<2.5mA		
200mA		
<2.5mA		
2.2A for 20ms		
5mA		
<=10 VAC :<=8 VDC		
25HZ AC; 40 Hz DC		
10ms/10ms		
<15% (Sr)		
<1.0% (Sr)		
IP67		
-25 °C - +70 °C		
<10% (Sr)		
YES		
-		
-		
RFI>3V/m / EFT>1KV / ESD>4KV (contact)		
IEC 60947-5-2,Part 7.4.1 / IEC 60947-5-2,Part 7.4.2		
PBT		
FCP1-1805U-A2U2Y	9	FCP2-1808U-A2U2Y
FCP1-1805U-B2U2Y	10	FCP2-1808U-B2U2Y
5.0φ44x0.1		
Approx.124 g		

20-250 VAC, 50-60 Hz; 20-250 VDC		
DC RIPPLE <10%		
<2.5mA		
200mA		
<2.5mA		
2.2A for 20ms		
5mA		
<=10 VAC :<=8 VDC		
25HZ AC; 40 Hz DC		
10ms/10ms		
<15% (Sr)		
<1.0% (Sr)		
IP67		
-25 °C - +70 °C		
<10% (Sr)		
YES		
-		
-		
RFI>3V/m / EFT>1KV / ESD>4KV (contact)		
IEC 60947-5-2,Part 7.4.1 / IEC 60947-5-2,Part 7.4.2		
PBT		
FCP1-1805U-A2U2Z	11	FCP2-1808U-A2U2Z
FCP1-1805U-B2U2Z	12	FCP2-1808U-B2U2Z
5.0φ44x0.1		
Approx.124 g		

AC/DC INDUCTIVE PLASTIC HOUSING PROXIMITY SWITCH

ϕ20			M 30			ϕ34		
●	○		●	○		●	○	
5 mm	8 mm		10 mm	15 mm		15 mm	20 mm	
PBT RESIN			PBT RESIN			PBT RESIN		
●			●			●		
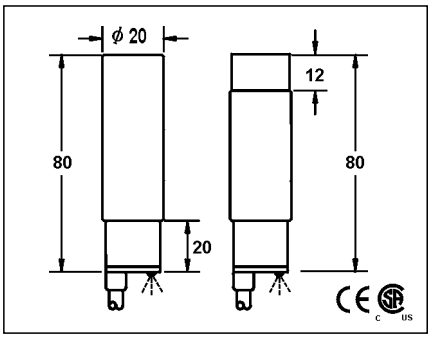			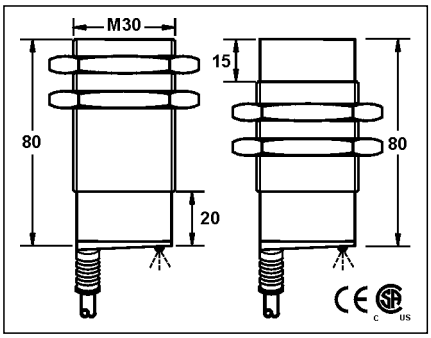			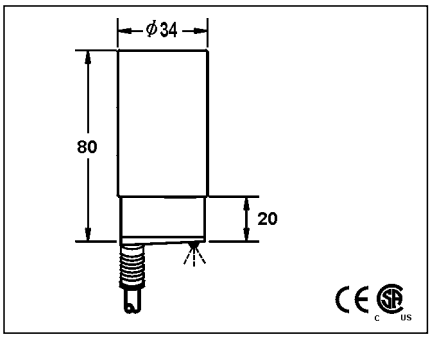		
20-250 VAC, 50-60 Hz; 20-250 VDC			20-250 VAC, 50-60 Hz; 20-250 VDC			20-250 VAC, 50-60 Hz; 20-250 VDC		
DC RIPPLE <10%			DC RIPPLE <10%			DC RIPPLE <10%		
<2.5mA			<2.5mA			<2.5mA		
200mA			200mA			200mA		
<2.5mA			<2.5mA			<2.5mA		
2.2A for 20ms			2.2A for 20ms			2.2A for 20ms		
5mA			5mA			5mA		
<=10 VAC :<=8 VDC			<=10 VAC :<=8 VDC			<=10 VAC :<=8 VDC		
25HZ AC; 40 Hz DC			25HZ AC; 40 Hz DC			25HZ AC; 40 Hz DC		
10ms/10ms			10ms/10ms			10ms/10ms		
<15% (Sr)			<15% (Sr)			<15% (Sr)		
<1.0% (Sr)			<1.0% (Sr)			<1.0% (Sr)		
IP67			IP67			IP67		
-25°C - +70°C			-25°C - +70°C			-25°C - +70°C		
<10% (Sr)			<10% (Sr)			<10% (Sr)		
YES			YES			YES		
-			-			-		
-			-			-		
RFI>3V/m / EFT>1KV / ESD>4KV (contact)			RFI>3V/m / EFT>1KV / ESD>4KV (contact)			RFI>3V/m / EFT>1KV / ESD>4KV (contact)		
IEC 60947-5-2,Part 7.4.1 / IEC 60947-5-2,Part 7.4.2			IEC 60947-5-2,Part 7.4.1 / IEC 60947-5-2,Part 7.4.2			IEC 60947-5-2,Part 7.4.1 / IEC 60947-5-2,Part 7.4.2		
PBT			PBT			PBT		
FCP1-D2005U-A2U2	9	FCP2-D2008U-A2U2	FCP1-3010U-A2U2	9	FCP2-3015U-A2U2	FCP1-D3415U-A2U2	9	FCP2-D3420U-A2U2
FCP1-D2005U-B2U2	10	FCP2-D2008U-B2U2	FCP1-3010U-B2U2	10	FCP2-3015U-B2U2	FCP1-D3415U-B2U2	10	FCP2-D3420U-B2U2
4ϕ2x0.34			4ϕ2x0.34			4ϕ2x0.34		
Approx.68 g			Approx.68 g			Approx.124 g		

AC/DC INDUCTIVE PROXIMITY SWITCH CONNECTOR TYPE

ϕ11			M 12			M 18		
●	○		●	○		●	○	
2 mm	4 mm		2 mm	4 mm		5 mm	8 mm	
stainless steel or nickel plated brass			stainless steel or nickel plated brass			stainless steel or nickel plated brass		
●			●			●		
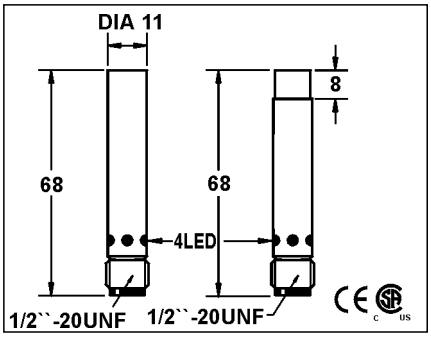			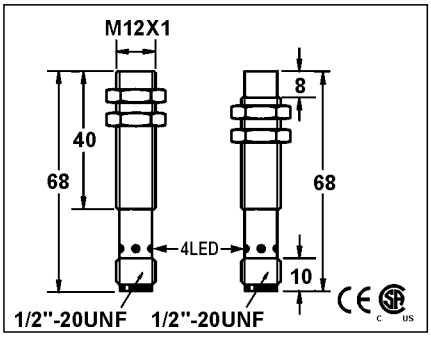			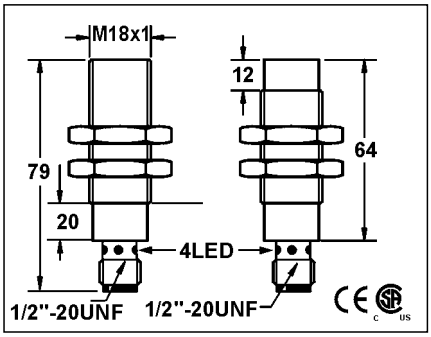		
20-250 VAC, 50-60 Hz; 20-250 VDC			20-250 VAC, 50-60 Hz; 20-250 VDC			20-250 VAC, 50-60 Hz; 20-250 VDC		
DC RIPPLE <10%			DC RIPPLE <10%			DC RIPPLE <10%		
<2.5mA			<2.5mA			<2.5mA		
100mA			100mA			100mA		
<2.5mA			<2.5mA			<2.5mA		
2.2A for 20ms			2.2A for 20ms			2.2A for 20ms		
5mA			5mA			5mA		
<=10 VAC :<=8 VDC			<=10 VAC :<=8 VDC			<=10 VAC :<=8 VDC		
25HZ AC; 40 Hz DC			25HZ AC; 40 Hz DC			25HZ AC; 40 Hz DC		
10ms/10ms			10ms/10ms			10ms/10ms		
<15%(Sr)			<15%(Sr)			<15%(Sr)		
<1.0% (Sr)			<1.0% (Sr)			<1.0% (Sr)		
IP67			IP67			IP67		
-25°C - +70°C			-25°C - +70°C			-25°C - +70°C		
<10% (Sr)			<10% (Sr)			<10% (Sr)		
YES (DC 20~30V only)			YES (DC 20~30V only)			YES (DC 20~30V only)		
-			-			-		
-			-			-		
RFI>3V/m / EFT>1KV / ESD>4KV (contact)			RFI>3V/m / EFT>1KV / ESD>4KV (contact)			RFI>3V/m / EFT>1KV / ESD>4KV (contact)		
IEC 60947-5-2,Part 7.4.1 / IEC 60947-5-2,Part 7.4.2			IEC 60947-5-2,Part 7.4.1 / IEC 60947-5-2,Part 7.4.2			IEC 60947-5-2,Part 7.4.1 / IEC 60947-5-2,Part 7.4.2		
PBT			POM		PBT	PBT		
FCM1-D1102U-AUU3	52	FCM2-D1104U-AUU3	FCM1-1202U-AUU3	52	FCM2-1204U-AUU3	FCM1-1805U-AUU3	52	FCM2-1808U-AUU3
FCM1-D1102U-BUU3	52	FCM2-D1104U-BUU3	FCM1-1202U-BUU3	52	FCM2-1204U-BUU3	FCM1-1805U-BUU3	52	FCM2-1808U-BUU3
Approx.30 g		Approx.29 g	Approx.31 g		Approx.30 g	Approx.69 g		Approx.68 g

AC/DC INDUCTIVE PROXIMITY SWITCH CONNECTOR TYPE

M 18		M 18		M 18	
●	○	●	○	●	○
5 mm	8 mm	5 mm	8 mm	5 mm	8 mm
stainless steel or nickel plated brass		stainless steel or nickel plated brass		stainless steel or nickel plated brass	
●		●		●	

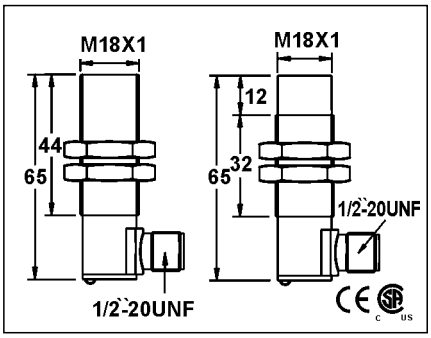

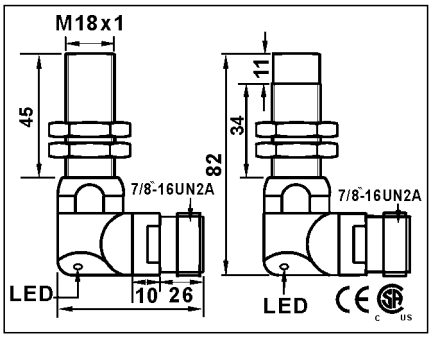

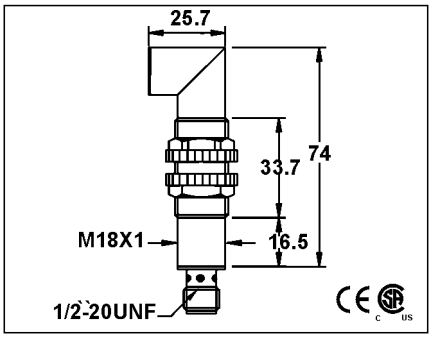

20-250 VAC, 50-60 Hz; 20-250 VDC		
DC RIPPLE <10%		
<2.5mA		
200mA		
<2.5mA		
2.2A for 20ms		
5mA		
<=10 VAC :<=8 VDC		
25HZ AC; 40 Hz DC		
10ms/10ms		
<15% (Sr)		
<1.0% (Sr)		
IP67		
-25°C - +70°C		
<10% (Sr)		
YES		
-		
-		
RFI>3V/m / EFT>1KV / ESD>4KV (contact)		
IEC 60947-5-2,Part 7.4.1 / IEC 60947-5-2,Part 7.4.2		
PBT		
FCM1-1805U-AUU3Y	52	FCM2-1808U-AUU3Y
FCM1-1805U-BUU3Y	52	FCM2-1808U-BUU3Y
Approx.69 g		Approx.68 g

20-250 VAC, 50-60 Hz; 20-250 VDC		
DC RIPPLE <10%		
<2.5mA		
200mA		
<2.5mA		
2.2A for 20ms		
5mA		
<=10 VAC :<=8 VDC		
25HZ AC; 40 Hz DC		
10ms/10ms		
<15% (Sr)		
<1.0% (Sr)		
IP67		
-25°C - +70°C		
<10% (Sr)		
YES		
-		
-		
RFI>3V/m / EFT>1KV / ESD>4KV (contact)		
IEC 60947-5-2,Part 7.4.1 / IEC 60947-5-2,Part 7.4.2		
PBT		
FCM1-1805U-AZU3Y	52	FCM2-1808U-AZU3Y
FCM1-1805U-BZU3Y	52	FCM2-1808U-BZU3Y
FCM*-*****-*Z*** Z=7/8-16UN2A U=1/2-20UNF		
Approx.251 g		Approx.283 g

20-250 VAC, 50-60 Hz; 20-250 VDC		
DC RIPPLE <10%		
<2.5mA		
200mA		
<2.5mA		
2.2A for 20ms		
5mA		
<=10 VAC :<=8 VDC		
25HZ AC; 40 Hz DC		
10ms/10ms		
<15% (Sr)		
<1.0% (Sr)		
IP67		
-25°C - +70°C		
<10% (Sr)		
YES		
-		
-		
RFI>3V/m / EFT>1KV / ESD>4KV (contact)		
IEC 60947-5-2,Part 7.4.1 / IEC 60947-5-2,Part 7.4.2		
PBT		
FCM1-1805U-AUU3Z	52	FCM2-1808U-AUU3Z
FCM1-1805U-BUU3Z	52	FCM2-1808U-BUU3Z
Approx.69 g		Approx.68 g

AC/DC INDUCTIVE PROXIMITY SWITCH CONNECTOR TYPE

M 30		
●	○	
10 mm	15 mm	
stainless steel or nickel plated brass		
●		
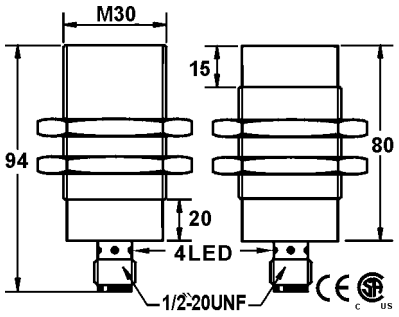		
20-250 VAC, 50-60 Hz; 20-250 VDC		
DC RIPPLE <10%		
<2.5mA		
200mA		
<2.5mA		
2.2A for 20ms		
5mA		
<=10 VAC :<=8 VDC		
25HZ AC; 40 Hz DC		
10ms/10ms		
<15% (Sr)		
<1.0% (Sr)		
IP67		
-25°C - +70°C		
<10% (Sr)		
YES		
-		
-		
RFI>3V/m / EFT>1KV / ESD>4KV (contact)		
IEC 60947-5-2,Part 7.4.1 / IEC 60947-5-2,Part 7.4.2		
PBT		
FCM1-3010U-AUU3	52	FCM2-3015U-AUU3
FCM1-3010U-BUU3	52	FCM2-3015U-BUU3
Approx.147 g	Approx.137 g	

M 30		
●	○	
10 mm	15 mm	
stainless steel or nickel plated brass		
●		
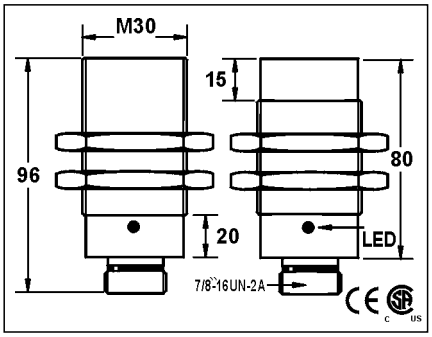		
20-250 VAC, 50-60 Hz; 20-250 VDC		
DC RIPPLE <10%		
<2.5mA		
200mA		
<2.5mA		
2.2A for 20ms		
5mA		
<=10 VAC :<=8 VDC		
25HZ AC; 40 Hz DC		
10ms/10ms		
<15% (Sr)		
<1.0% (Sr)		
IP67		
-25°C - +70°C		
<10% (Sr)		
YES		
-		
-		
RFI>3V/m / EFT>1KV / ESD>4KV (contact)		
IEC 60947-5-2,Part 7.4.1 / IEC 60947-5-2,Part 7.4.2		
PBT		
FCM1-3010U-AZU3	62	FCM2-3015U-AZU3
FCM1-3010U-BZU3	62	FCM2-3015U-BZU3
Approx.187 g	Approx.179 g	

M 30		
●	○	
10 mm	15 mm	
stainless steel or nickel plated brass		
●		
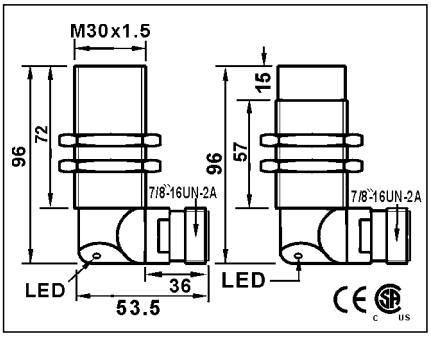		
20-250 VAC, 50-60 Hz; 20-250 VDC		
DC RIPPLE <10%		
<2.5mA		
200mA		
<2.5mA		
2.2A for 20ms		
5mA		
<=10 VAC :<=8 VDC		
25HZ AC; 40 Hz DC		
10ms/10ms		
<15% (Sr)		
<1.0% (Sr)		
IP67		
-25°C - +70°C		
<10% (Sr)		
YES		
-		
-		
RFI>3V/m / EFT>1KV / ESD>4KV (contact)		
IEC 60947-5-2,Part 7.4.1 / IEC 60947-5-2,Part 7.4.2		
PBT		
FCM1-3010U-AZU3Y	62	FCM2-3015U-AZU3Y
FCM1-3010U-BZU3Y	62	FCM2-3015U-BZU3Y
FCM*-*****-*Z*** Z=7/8"-16UN2A U=1/2"-20UNF		
Approx.311 g	Approx.356 g	

AC/DC INDUCTIVE PLASTIC HOUSING PROXIMITY SWITCH CONNECTOR TYPE

M 12			M 18			M 18		
●	○		●	○		●	○	
2 mm	4 mm		5 mm	8 mm		5 mm	8 mm	
PBT RESIN			PBT RESIN			PBT RESIN		
●			●			●		
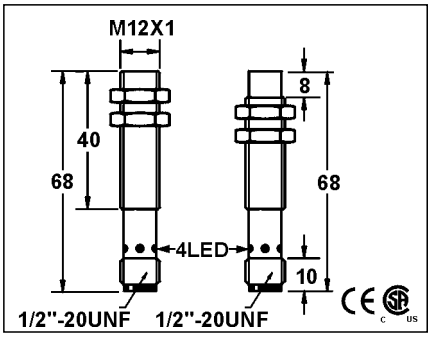			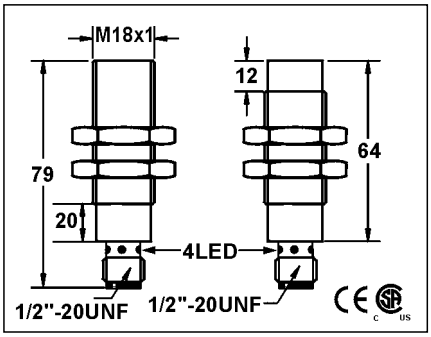			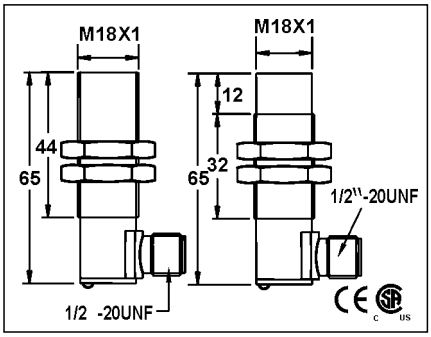		
20-250 VAC, 50-60 Hz; 20-250 VDC			20-250 VAC, 50-60 Hz; 20-250 VDC			20-250 VAC, 50-60 Hz; 20-250 VDC		
DC RIPPLE <10%			DC RIPPLE <10%			DC RIPPLE <10%		
<2.5mA			<2.5mA			<2.5mA		
100mA			200mA			200mA		
<2.5mA			<2.5mA			<2.5mA		
2.2A for 20ms			2.2A for 20ms			2.2A for 20ms		
5mA			5mA			5mA		
<=10 VAC :<=8 VDC			<=10 VAC :<=8 VDC			<=10 VAC :<=8 VDC		
25HZ AC; 40 Hz DC			25HZ AC; 40 Hz DC			25HZ AC; 40 Hz DC		
10ms/10ms			10ms/10ms			10ms/10ms		
<15%(Sr)			<15% (Sr)			<15% (Sr)		
<1.0% (Sr)			<1.0% (Sr)			<1.0% (Sr)		
IP67			IP67			IP67		
-25°C - +70°C			-25°C - +70°C			-25°C - +70°C		
<10% (Sr)			<10% (Sr)			<10% (Sr)		
YES (DC 20~30V only)			YES			YES		
-			-			-		
-			-			-		
RFI>3V/m / EFT>1KV / ESD>4KV (contact)			RFI>3V/m / EFT>1KV / ESD>4KV (contact)			RFI>3V/m / EFT>1KV / ESD>4KV (contact)		
IEC 60947-5-2,Part 7.4.1 / IEC 60947-5-2,Part 7.4.2			IEC 60947-5-2,Part 7.4.1 / IEC 60947-5-2,Part 7.4.2			IEC 60947-5-2,Part 7.4.1 / IEC 60947-5-2,Part 7.4.2		
PBT			PBT			PBT		
FCP1-1202U-AUU3	54	FCP2-1204U-AUU3	FCP1-1805U-AUU3	54	FCP2-1808U-AUU3	FCP1-1805U-AUU3Y	54	FCP2-1808U-AUU3Y
FCP1-1202U-BUU3	54	FCP2-1204U-BUU3	FCP1-1805U-BUU3	54	FCP2-1808U-BUU3	FCP1-1805U-BUU3Y	54	FCP2-1808U-BUU3Y
Approx.14 g			Approx.80 g			Approx.80 g		

AC/DC INDUCTIVE PLASTIC HOUSING PROXIMITY SWITCH CONNECTOR TYPE

M 18			ϕ20			M 30		
●	○		●	○		●	○	
5 mm	8 mm		8 mm	12 mm		10 mm	15 mm	
PBT RESIN			PBT RESIN			PBT RESIN		
●			●			●		
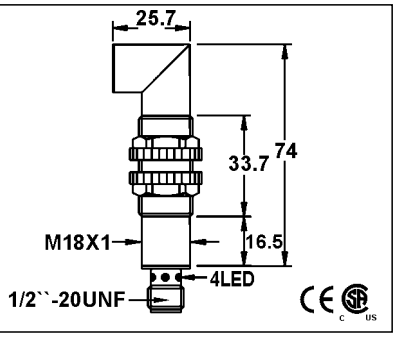			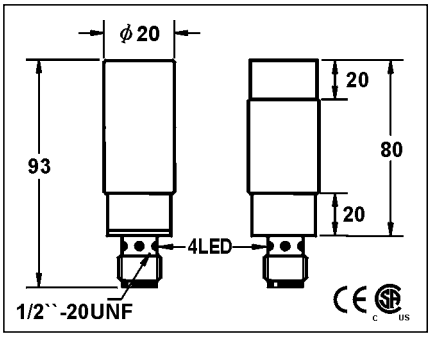			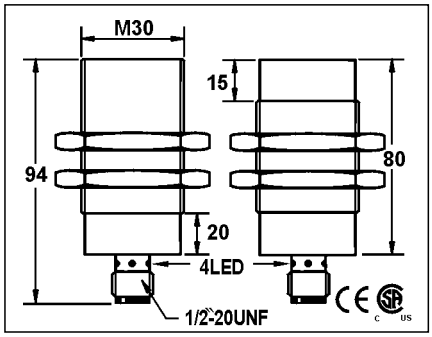		
20-250 VAC, 50-60 Hz; 20-250 VDC			20-250 VAC, 50-60 Hz; 20-250 VDC			20-250 VAC, 50-60 Hz; 20-250 VDC		
DC RIPPLE <10%			DC RIPPLE <10%			DC RIPPLE <10%		
<2.5mA			<2.5mA			<2.5mA		
200mA			200mA			200mA		
<2.5mA			<2.5mA			<2.5mA		
2.2A for 20ms			2.2A for 20ms			2.2A for 20ms		
5mA			5mA			5mA		
<=10 VAC :<=8 VDC			<=10 VAC :<=8 VDC			<=10 VAC :<=8 VDC		
25HZ AC; 40 Hz DC			25HZ AC; 40 Hz DC			25HZ AC; 40 Hz DC		
10ms/10ms			10ms/10ms			10ms/10ms		
<15% (Sr)			<15% (Sr)			<15% (Sr)		
<1.0% (Sr)			<1.0% (Sr)			<1.0% (Sr)		
IP67			IP67			IP67		
-25°C - +70°C			-25°C - +70°C			-25°C - +70°C		
<10% (Sr)			<10% (Sr)			<10% (Sr)		
YES			YES			YES		
-			-			-		
-			-			-		
RFI>3V/m / EFT>1KV / ESD>4KV (contact)			RFI>3V/m / EFT>1KV / ESD>4KV (contact)			RFI>3V/m / EFT>1KV / ESD>4KV (contact)		
IEC 60947-5-2,Part 7.4.1 / IEC 60947-5-2,Part 7.4.2			IEC 60947-5-2,Part 7.4.1 / IEC 60947-5-2,Part 7.4.2			IEC 60947-5-2,Part 7.4.1 / IEC 60947-5-2,Part 7.4.2		
PBT			PBT			PBT		
FCP1-1805U-AUU3Z	54	FCP2-1808U-AUU3Z	FCP1-D2008U-AUU3	54	FCP2-D2012U-AUU3	FCP1-3010U-AUU3	54	FCP2-3015U-AUU3
FCP1-1805U-BUU3Z	54	FCP2-1808U-BUU3Z	FCP1-D2008U-BUU3	54	FCP2-D2012U-BUU3	FCP1-3010U-BUU3	54	FCP2-3015U-BUU3
Approx.14 g			Approx.90 g			Approx.120 g		

AC/DC INDUCTIVE PLASTIC HOUSING PROXIMITY SWITCH CONNECTOR TYPE

M 30			ϕ34			ϕ34		
●	○		●	○		●	○	
10 mm	15 mm		15 mm	20 mm		15 mm	20 mm	
PBT RESIN			PBT RESIN			PBT RESIN		
●			●			●		
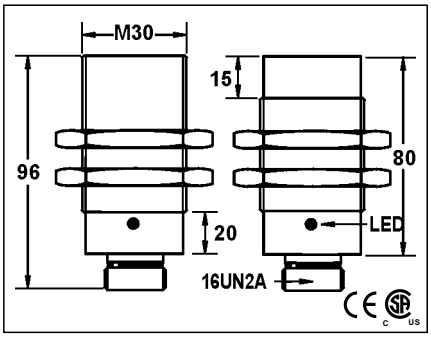			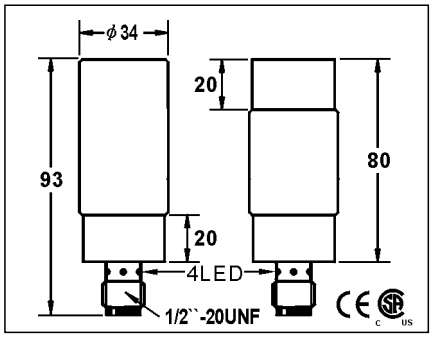			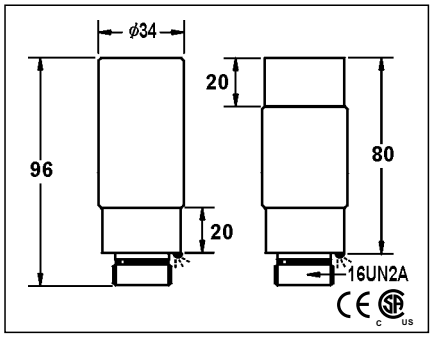		
20-250 VAC, 50-60 Hz; 20-250 VDC			20-250 VAC, 50-60 Hz; 20-250 VDC			20-250 VAC, 50-60 Hz; 20-250 VDC		
DC RIPPLE <10%			DC RIPPLE <10%			DC RIPPLE <10%		
<2.5mA			<2.5mA			<2.5mA		
200mA			200mA			200mA		
<2.5mA			<2.5mA			<2.5mA		
2.2A for 20ms			2.2A for 20ms			2.2A for 20ms		
5mA			5mA			5mA		
<=10 VAC :<=8 VDC			<=10 VAC :<=8 VDC			<=10 VAC :<=8 VDC		
25HZ AC; 40 Hz DC			25HZ AC; 40 Hz DC			25HZ AC; 40 Hz DC		
10ms/10ms			10ms/10ms			10ms/10ms		
<15% (Sr)			<15% (Sr)			<15% (Sr)		
<1.0% (Sr)			<1.0% (Sr)			<1.0% (Sr)		
IP67			IP67			IP67		
-25°C - +70°C			-25°C - +70°C			-25°C - +70°C		
<10% (Sr)			<10% (Sr)			<10% (Sr)		
YES			YES			YES		
-			-			-		
-			-			-		
RFI>3V/m / EFT>1KV / ESD>4KV (contact)			RFI>3V/m / EFT>1KV / ESD>4KV (contact)			RFI>3V/m / EFT>1KV / ESD>4KV (contact)		
IEC 60947-5-2,Part 7.4.1 / IEC 60947-5-2,Part 7.4.2			IEC 60947-5-2,Part 7.4.1 / IEC 60947-5-2,Part 7.4.2			IEC 60947-5-2,Part 7.4.1 / IEC 60947-5-2,Part 7.4.2		
PBT			PBT			PBT		
FCP1-3010U-AZU2	62	FCP2-3015U-AZU2	FCP1-D3415U-AUU3	54	FCP2-D3420U-AUU3	FCP1-D3415U-AZU2	62	FCP2-D3420U-AZU2
FCP1-3010U-BZU2	62	FCP2-3015U-BZU2	FCP1-D3415U-BUU3	54	FCP2-D3420U-BUU3	FCP1-D3415U-BZU2	62	FCP2-D3420U-BZU2
Approx.120 g			Approx.162 g			Approx.162 g		