DC ULTRA-MINI TYPE INDUCTIVE PROXIMITY SWITCH

ϕ3	ϕ3	ϕ3	ϕ3
●		●	●
0.8 mm		0.8 mm	0.8 mm
stainless steel		stainless steel	stainless steel
●		●	●

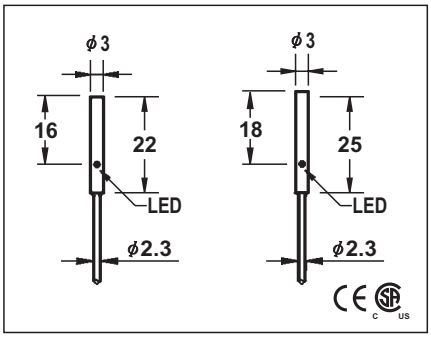

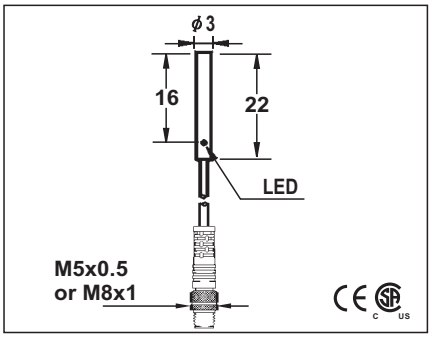

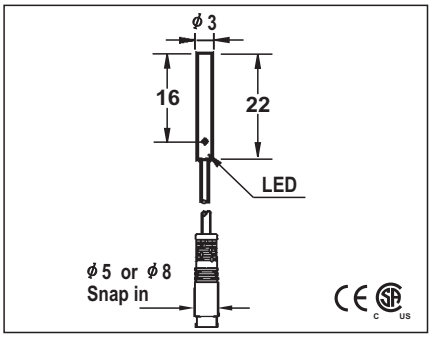

10-30VDC or 5-36VDC	10-30VDC or 5-36VDC	10-30VDC or 5-36VDC
<10%	<10%	<10%
<10mA	<10mA	<10mA
200mA	200mA	200mA
<0.01mA	<0.01mA	<0.01mA
-	-	-
-	-	-
<1.5V	<1.5V	<1.5V
2KHZ	2KHZ	2KHZ
0.1ms/0.1ms	0.1ms/0.1ms	0.1ms/0.1ms
<15%(Sr)	<15%(Sr)	<15%(Sr)
<1.0%(Sr)	<1.0%(Sr)	<1.0%(Sr)
IP67	IP67	IP67
-25°C - +70°C	-25°C - +70°C	-25°C - +70°C
<10%(Sr)	<10%(Sr)	<10%(Sr)
YES	YES	YES
220mA	220mA	220mA
<10ms	<10ms	<10ms
RFI>3V/m / EFT>1KV / ESD>4KV (contact)	RFI>3V/m / EFT>1KV / ESD>4KV (contact)	RFI>3V/m / EFT>1KV / ESD>4KV (contact)
IEC 60947-5-2,Part 7.4.1 / IEC 60947-5-2,Part 7.4.2	IEC 60947-5-2,Part 7.4.1 / IEC 60947-5-2,Part 7.4.2	IEC 60947-5-2,Part 7.4.1 / IEC 60947-5-2,Part 7.4.2
POM	POM	POM

FCU1-D030.8N-A3S2	1	FCU1-D030.8N-A3U2	FCU1-D030.8N-A3S0.2/P5	1	FCU1-D030.8N-A3S0.2/P8	FCU1-D030.8N-A3S0.2/SN5	1	FCU1-D030.8N-A3S0.2/SN8
FCU1-D030.8N-B3S2	2	FCU1-D030.8N-B3U2	FCU1-D030.8N-B3S0.2/P5	2	FCU1-D030.8N-B3S0.2/P8	FCU1-D030.8N-B3S0.2/SN5	2	FCU1-D030.8N-B3S0.2/SN8
FCU1-D030.8P-A3S2	3	FCU1-D030.8P-A3U2	FCU1-D030.8P-A3S0.2/P5	3	FCU1-D030.8P-A3S0.2/P8	FCU1-D030.8P-A3S0.2/SN5	3	FCU1-D030.8P-A3S0.2/SN8
FCU1-D030.8P-B3S2	4	FCU1-D030.8P-B3U2	FCU1-D030.8P-B3S0.2/P5	4	FCU1-D030.8P-B3S0.2/P8	FCU1-D030.8P-B3S0.2/SN5	4	FCU1-D030.8P-B3S0.2/SN8
			ICU1-D030.8NU/P5	21	ICU1-D030.8NU/P8	ICU1-D030.8NU/SN5	21	ICU1-D030.8NU/SN8
ICU1-D030.8N-A3S2	1	ICU1-D030.8N-A3U2	ICU1-D030.8N-A3S0.2/P5	29	ICU1-D030.8N-A3S0.2/P8	ICU1-D030.8N-A3S0.2/SN5	29	ICU1-D030.8N-A3S0.2/SN8
ICU1-D030.8N-B3S2	2	ICU1-D030.8N-B3U2	ICU1-D030.8N-B3S0.2/P5	30	ICU1-D030.8N-B3S0.2/P8	ICU1-D030.8N-B3S0.2/SN5	30	ICU1-D030.8N-B3S0.2/SN8
ICU1-D030.8P-A3S2	3	ICU1-D030.8P-A3U2	ICU1-D030.8P-A3S0.2/P5	31	ICU1-D030.8P-A3S0.2/P8	ICU1-D030.8P-A3S0.2/SN5	31	ICU1-D030.8P-A3S0.2/SN8
ICU1-D030.8P-B3S2	4	ICU1-D030.8P-B3U2	ICU1-D030.8P-B3S0.2/P5	32	ICU1-D030.8P-B3S0.2/P8	ICU1-D030.8P-B3S0.2/SN5	32	ICU1-D030.8P-B3S0.2/SN8

Wiring diagram number see page 11-18.
The following page is the same.

FCU***/P5 — M5 Pigtail mode
FCU***/P8 — M8 Pigtail mode

1、NAMUR type specifications see page 22
2、 FCU***/SN5 — ϕ5 Pigtail mode
FCU***/SN8 — ϕ8 Pigtail mode

2.3ϕ 3x0.15	2.3ϕ 3x0.15	2.3ϕ 3x0.15
approx.25 g	approx.25 g / Approx.26 g	approx.25 g / Approx.26 g

DC ULTRA-MINI TYPE INDUCTIVE PROXIMITY SWITCH

M4	M4	M4
●	●	●
0.8 mm	0.8 mm	0.8 mm
stainless steel	stainless steel	stainless steel
●	●	●
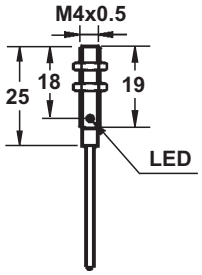	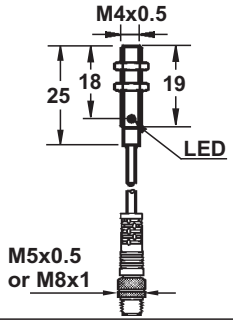	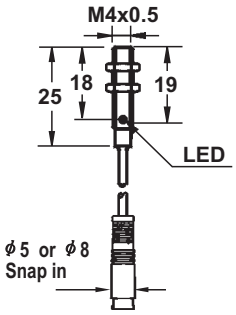
10-30VDC or 5-36VDC	10-30VDC or 5-36VDC	10-30VDC or 5-36VDC
<10%	<10%	<10%
<10mA	<10mA	<10mA
200mA	200mA	200mA
<0.01mA	<0.01mA	<0.01mA
-	-	-
-	-	-
<1.5V	<1.5V	<1.5V
2KHZ	2KHZ	2KHZ
0.1ms/0.1ms	0.1ms/0.1ms	0.1ms/0.1ms
<15%(Sr)	<15%(Sr)	<15%(Sr)
<1.0%(Sr)	<1.0%(Sr)	<1.0%(Sr)
IP67	IP67	IP67
-25°C - +70°C	-25°C - +70°C	-25°C - +70°C
<10%(Sr)	<10%(Sr)	<10%(Sr)
YES	YES	YES
220mA	220mA	220mA
<10ms	<10ms	<10ms
RFI>3V/m / EFT>1KV / ESD>4KV (contact)	RFI>3V/m / EFT>1KV / ESD>4KV (contact)	RFI>3V/m / EFT>1KV / ESD>4KV (contact)
IEC 60947-5-2,Part 7.4.1 / IEC 60947-5-2,Part 7.4.2	IEC 60947-5-2,Part 7.4.1 / IEC 60947-5-2,Part 7.4.2	IEC 60947-5-2,Part 7.4.1 / IEC 60947-5-2,Part 7.4.2
POM	POM	POM

FCU1-040.8N-A3U2	1	FCU1-040.8N-A3U0.2/P5	29	FCU1-040.8N-A3U0.2/P8	FCU1-040.8N-A3U0.2/SN5	29	FCU1-040.8N-A3U0.2/SN8
FCU1-040.8N-B3U2	2	FCU1-040.8N-B3U0.2/P5	30	FCU1-040.8N-B3U0.2/P8	FCU1-040.8N-B3U0.2/SN5	30	FCU1-040.8N-B3U0.2/SN8
FCU1-040.8P-A3U2	3	FCU1-040.8P-A3U0.2/P5	31	FCU1-040.8P-A3U0.2/P8	FCU1-040.8P-A3U0.2/SN5	31	FCU1-040.8P-A3U0.2/SN8
FCU1-040.8P-B3U2	4	FCU1-040.8P-B3U0.2/P5	32	FCU1-040.8P-B3U0.2/P8	FCU1-040.8P-B3U0.2/SN5	32	FCU1-040.8P-B3U0.2/SN8
FCU1-040.8NU	21	FCU1-040.8NU/P5	21	FCU1-040.8NU/P8	FCU1-040.8NU/SN5	21	FCU1-040.8NU/SN8
ICU1-040.8N-A3U2	1	ICU1-040.8N-A3U0.2/P5	29	ICU1-040.8N-A3U0.2/P8	ICU1-040.8N-A3U0.2/SN5	29	ICU1-040.8N-A3U0.2/SN8
ICU1-040.8N-B3U2	2	ICU1-040.8N-B3U0.2/P5	30	ICU1-040.8N-B3U0.2/P8	ICU1-040.8N-B3U0.2/SN5	30	ICU1-040.8N-B3U0.2/SN8
ICU1-040.8P-A3U2	3	ICU1-040.8P-A3U0.2/P5	31	ICU1-040.8P-A3U0.2/P8	ICU1-040.8P-A3U0.2/SN5	31	ICU1-040.8P-A3U0.2/SN8
ICU1-040.8P-B3U2	4	ICU1-040.8P-B3U0.2/P5	32	ICU1-040.8P-B3U0.2/P8	ICU1-040.8P-B3U0.2/SN5	32	ICU1-040.8P-B3U0.2/SN8

NAMUR type specifications see page 22	FCU***/P5 — M5 Pigtail mode FCU***/P8 — M8 Pigtail mode	FCU***/SN5 — ϕ5 Pigtail mode FCU***/SN8 — ϕ8 Pigtail mode
2.3ϕ 3x0.15	2.3ϕ 3x0.15	2.3ϕ3x0.15
Approx.22 g	Approx.30 g / Approx.31 g	Approx.30 g / Approx.31 g

DC ULTRA-MINI TYPE INDUCTIVE PROXIMITY SWITCH

ϕ4	ϕ4	ϕ4
●	●	●
0.8 mm	0.8 mm	0.8 mm
stainless steel	stainless steel	stainless steel
●	●	●
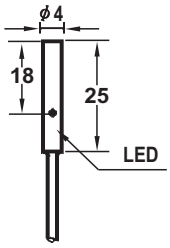	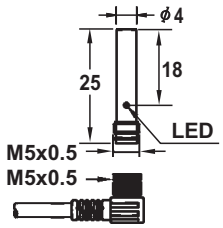	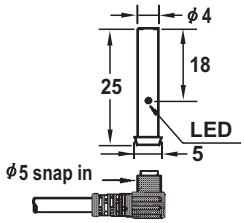
10-30VDC or 5-36VDC	10-30VDC or 5-36VDC	10-30VDC or 5-36VDC
<10%	<10%	<10%
<10mA	<10mA	<10mA
200mA	200mA	200mA
<0.01mA	<0.01mA	<0.01mA
-	-	-
-	-	-
<1.5V	<1.5V	<1.5V
2KHZ	2KHZ	2KHZ
0.1ms/0.1ms	0.1ms/0.1ms	0.1ms/0.1ms
<15%(Sr)	<15%(Sr)	<15%(Sr)
<1.0%(Sr)	<1.0%(Sr)	<1.0%(Sr)
IP67	IP67	IP67
-25°C - +70°C	-25°C - +70°C	-25°C - +70°C
<10%(Sr)	<10%(Sr)	<10%(Sr)
YES	YES	YES
220mA	220mA	220mA
<10ms	<10ms	<10ms
RFI>3V/m / EFT>1KV / ESD>4KV (contact)	RFI>3V/m / EFT>1KV / ESD>4KV (contact)	RFI>3V/m / EFT>1KV / ESD>4KV (contact)
IEC 60947-5-2,Part 7.4.1 / IEC 60947-5-2,Part 7.4.2	IEC 60947-5-2,Part 7.4.1 / IEC 60947-5-2,Part 7.4.2	IEC 60947-5-2,Part 7.4.1 / IEC 60947-5-2,Part 7.4.2
POM	POM	POM

FCU1-D040.8N-A3U2	1	FCU1-D040.8N-AMS4	29	FCU1-D040.8N-AMS4/SN	29
FCU1-D040.8N-B3U2	2	FCU1-D040.8N-BMS4	30	FCU1-D040.8N-BMS4/SN	30
FCU1-D040.8P-A3U2	3	FCU1-D040.8P-AMS4	31	FCU1-D040.8P-AMS4/SN	31
FCU1-D040.8P-B3U2	4	FCU1-D040.8P-BMS4	32	FCU1-D040.8P-BMS4/SN	32
FCU1-D040.8NU	21				
ICU1-D040.8N-A3U2	1	ICU1-D040.8N-AMS4	20	ICU1-D040.8N-AMS4/SN	29
ICU1-D040.8N-B3U2	2	ICU1-D040.8N-BMS4	30	ICU1-D040.8N-BMS4/SN	30
ICU1-D040.8P-A3U2	3	ICU1-D040.8P-AMS4	31	ICU1-D040.8P-AMS4/SN	31
ICU1-D040.8P-B3U2	4	ICU1-D040.8P-BMS4	32	ICU1-D040.8P-BMS4/SN	32

NAMUR type specifications see page 22		ϕ5 Miniature snap in connector
		2.7ϕ3x0.15
Approx.22 g	Approx.18 g	Approx.18 g

DC ULTRA-MINI TYPE INDUCTIVE PROXIMITY SWITCH

ϕ4	ϕ4	M 5	ϕ5
●	●	●	
0.8 mm	0.8 mm	0.8 mm	1.0 mm
stainless steel	stainless steel	stainless steel	
●	●	●	
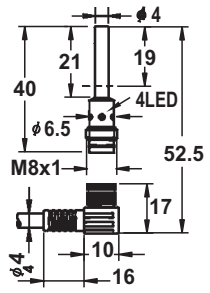	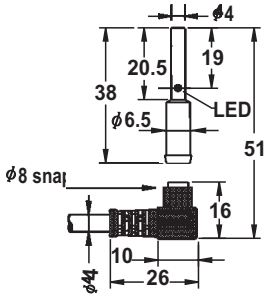	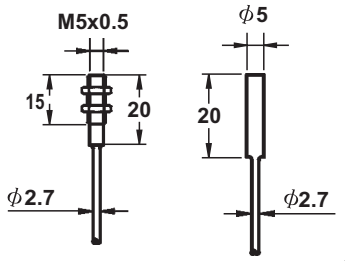	
10-30VDC	10-30VDC	6-12VDC	
<10%	<10%	<10%	
<10mA	<10mA	>2.2mA(OFF)	<1.1mA(ON)
200mA	200mA	-	
<0.01mA	<0.01mA	-	
-	-	-	
-	-	-	
<1.5V	<1.5V	-	
2KHZ	2KHZ	0.5KHZ	
0.1ms/0.1ms	0.1ms/0.1ms	0.2ms/0.2ms	
<15%(Sr)	<15%(Sr)	<15%(Sr)	
<1.0%(Sr)	<1.0%(Sr)	-	
IP67	IP67	IP67	
-25°C - +70°C	-25°C - +70°C	-25°C - +70°C	
<10%(Sr)	<10%(Sr)	<1%(Sr)	
YES	YES	-	
220mA	220mA	-	
<10ms	<10ms	<10ms	
RFI>3V/m / EFT>1KV / ESD>4KV (contact)	RFI>3V/m / EFT>1KV / ESD>4KV (contact)	RFI>3V/m / EFT>1KV / ESD>4KV (contact)	
IEC 60947-5-2,Part 7.4.1 / IEC 60947-5-2,Part 7.4.2	IEC 60947-5-2,Part 7.4.1 / IEC 60947-5-2,Part 7.4.2	IEC 60947-5-2,Part 7.4.1 / IEC 60947-5-2,Part 7.4.2	
POM	POM	POM	
FCU1-D040.8N-ACU3 25	FCU1-D040.8N-ACU3/SN 25		
FCU1-D040.8N-BCU3 25	FCU1-D040.8N-BCU3/SN 25		
FCU1-D040.8P-ACU3 26	FCU1-D040.8P-ACU3/SN 26		
FCU1-D040.8P-BCU3 26	FCU1-D040.8P-BCU3/SN 26		
		FCU1-050.8NU 21	FCU1-D051.0NU
Connecting cable: M8 female pico-style,screw locking,with moulded cable.	Connecting cable: female pico-style,snap-in device,with moulded cable.	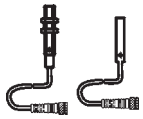 Note: All cable type have pigtail connect mode, FCU***/p └─pigtail mode	
		2.7ϕ 3x0.15	
approx.14 g	approx.14 g	approx.25 g	

DC ULTRA-MINI TYPE INDUCTIVE PROXIMITY SWITCH

M5	M5	ϕ5	M5
●	●		●
0.8 mm	0.8 mm	1.5 mm	0.8 mm
stainless steel	stainless steel		stainless steel
●	●		●
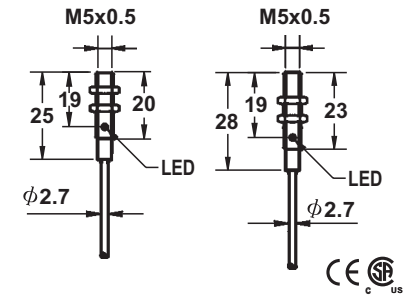	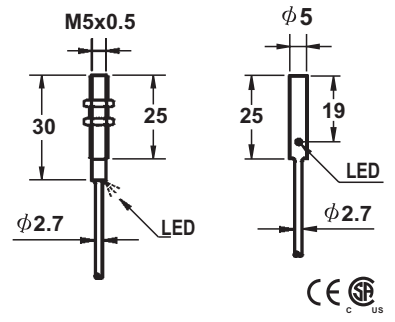		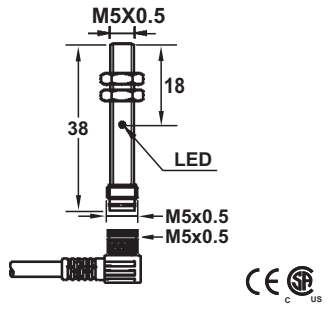
10-30VDC or 5-36VDC	10-30VDC or 5-36VDC		10-30VDC or 5-36VDC
<10%	<10%		<10%
<10mA	<10mA		<10mA
200mA	100mA	200mA	200mA
<0.01mA	<0.01mA		<0.01mA
-	-		-
-	-		-
<1.5V	<1.5V(10~30V)		<1.5V
2KHZ	2KHZ		2KHZ
0.1ms/0.1ms	0.1ms/0.1ms		0.1ms/0.1ms
<15%(Sr)	<15%(Sr)		<15%(Sr)
<1.0%(Sr)	<1.0%(Sr)		<1.0%(Sr)
IP67	IP67		IP67
-25°C - +70°C	-25°C - +70°C		-25°C - +70°C
<10%(Sr)	<10%(Sr)		<10%(Sr)
YES	NO	YES	YES
220mA	-	220mA	220mA
<10ms	<10ms		<10ms
RFI>3V/m / EFT>1KV / ESD>4KV (contact)	RFI>3V/m / EFT>1KV / ESD>4KV (contact)		RFI>3V/m / EFT>1KV / ESD>4KV (contact)
IEC 60947-5-2,Part 7.4.1 / IEC 60947-5-2,Part 7.4.2	IEC 60947-5-2,Part 7.4.1 / IEC 60947-5-2,Part 7.4.2		IEC 60947-5-2,Part 7.4.1 / IEC 60947-5-2,Part 7.4.2
POM	POM		POM

FCU1-050.8N-A3S2	1	FCU1-050.8N-A3U2	FCU1-050.8N-A3L2	1	FCU1-D051.5N-A3U2	FCU1-050.8N-AMU4	29
FCU1-050.8N-B3S2	2	FCU1-050.8N-B3U2	FCU1-050.8N-B3L2	2	FCU1-D051.5N-B3U2	FCU1-050.8N-BMU4	30
FCU1-050.8P-A3S2	3	FCU1-050.8P-A3U2	FCU1-050.8P-A3L2	3	FCU1-D051.5P-A3U2	FCU1-050.8P-AMU4	31
FCU1-050.8P-B3S2	4	FCU1-050.8P-B3U2	FCU1-050.8P-B3L2	4	FCU1-D051.5P-B3U2	FCU1-050.8P-BMU4	32
						FCU1-050.8NU-M	21
ICU1-050.8N-A3S2	1	ICU1-050.8N-A3U2	ICU1-050.8N-A3L2	1	ICU1-D051.5N-A3U2	ICU1-050.8N-AMU4	29
ICU1-050.8N-B3S2	2	ICU1-050.8N-B3U2	ICU1-050.8N-B3L2	2	ICU1-D051.5N-B3U2	ICU1-050.8N-BMU4	30
ICU1-050.8P-A3S2	3	ICU1-050.8P-A3U2	ICU1-050.8P-A3L2	3	ICU1-D051.5P-A3U2	ICU1-050.8P-AMU4	31
ICU1-050.8P-B3S2	4	ICU1-050.8P-B3U2	ICU1-050.8P-B3L2	4	ICU1-D051.5P-B3U2	ICU1-050.8P-BMU4	32

2.7ϕ 2x0.15	2.7ϕ 3x0.15	
approx.25 g	approx.25 g	Approx.13 g

DC ULTRA-MINI TYPE INDUCTIVE PROXIMITY SWITCH

M5	M5	M 5
●	●	●
0.8 mm	0.8 mm	0.8 mm
stainless steel	stainless steel	stainless steel
●	●	●
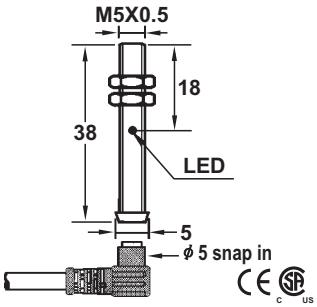	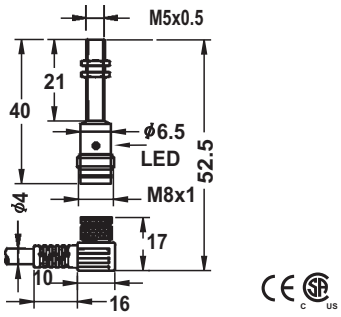	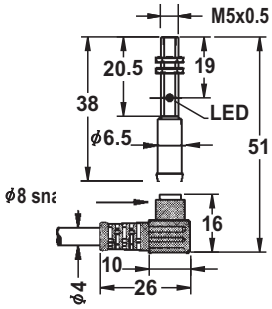
10-30VDC or 5-36VDC	10-30VDC	10-30VDC
<10%	<10%	<10%
<10mA	<10mA	<10mA
200mA	200mA	200mA
<0.01mA	<0.01mA	<0.01mA
-	-	-
-	-	-
<1.5V	<1.5V	<1.5V
2KHZ	2KHZ	2KHZ
0.1ms/0.1ms	0.1ms/0.1ms	0.1ms/0.1ms
<15%(Sr)	<15%(Sr)	<15%(Sr)
<1.0%(Sr)	<1.0%(Sr)	<1.0%(Sr)
IP67	IP67	IP67
-25°C - +70°C	-25°C - +70°C	-25°C - +70°C
<10%(Sr)	<10%(Sr)	<10%(Sr)
YES	YES	YES
220mA	220mA	220mA
<10ms	<10ms	<10ms
RFI>3V/m / EFT>1KV / ESD>4KV (contact)	RFI>3V/m / EFT>1KV / ESD>4KV (contact)	RFI>3V/m / EFT>1KV / ESD>4KV (contact)
IEC 60947-5-2,Part 7.4.1 / IEC 60947-5-2,Part 7.4.2	IEC 60947-5-2,Part 7.4.1 / IEC 60947-5-2,Part 7.4.2	IEC 60947-5-2,Part 7.4.1 / IEC 60947-5-2,Part 7.4.2
POM	POM	POM

FCU1-050.8N-AMU4/SN	29	FCU1-050.8N-ACU3	25	FCU1-050.8N-ACU3/SN	25
FCU1-050.8N-BMU4/SN	30	FCU1-050.8N-BCU3	25	FCU1-050.8N-BCU3/SN	25
FCU1-050.8P-AMU4/SN	31	FCU1-050.8P-ACU3	26	FCU1-050.8P-ACU3/SN	26
FCU1-050.8P-BMU4/SN	32	FCU1-050.8P-BCU3	26	FCU1-050.8P-BCU3/SN	26
FCU1-050.8NU-SN	21				
ICU1-050.8N-AMU4/SN	29	ICU1-050.8N-ACU3	25	ICU1-050.8N-ACU3/SN	25
ICU1-050.8N-BMU4/SN	30	ICU1-050.8N-BCU3	25	ICU1-050.8N-BCU3/SN	25
ICU1-050.8P-AMU4/SN	31	ICU1-050.8P-ACU3	26	ICU1-050.8P-ACU3/SN	26
ICU1-050.8P-BMU4/SN	32	ICU1-050.8P-BCU3	26	ICU1-050.8P-BCU3/SN	26

ϕ5 Miniature snap in connector	Connecting cable: M8 female pico-style,screw locking,with moulded cable.	Connecting cable: female pico-style,snap-in device,with moulded cable.
Approx.13 g	Approx.14 g	Approx.14 g

DC ULTRA-MINI TYPE INDUCTIVE PROXIMITY SWITCH

ϕ 6.5		
●		
1.0 mm	2.0 mm	3.0 mm
stainless steel		
●		

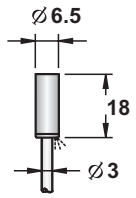

10-30VDC
<10%
<10mA
200mA
<0.01mA
-
-
<1.5V
2KHZ
0.1ms/0.1ms
<15%(Sr)
<1.0%(Sr)
IP67
-25°C - +70°C
<10%(Sr)
YES
220mA
<10ms
RFI>3V/m / EFT>1KV / ESD>4KV (contact)
IEC 60947-5-2,Part 7.4.1 / IEC 60947-5-2,Part 7.4.2
POM

FCU1-D0601N-A3R2	1	ECU1-D0602N-A3R2	1	LCU1-D0603N-A3R2
FCU1-D0601N-B3R2	2	ECU1-D0602N-B3R2	2	LCU1-D0603N-B3R2
FCU1-D0601P-A3R2	3	ECU1-D0602P-A3R2	3	LCU1-D0603P-A3R2
FCU1-D0601P-B3R2	4	ECU1-D0602P-B3R2	4	LCU1-D0603P-B3R2

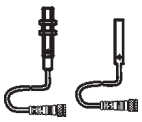

Note:
All cable type have pigtail connect mode,
*CU***/ p → pigtail mode

3 ϕ3x0.15
approx.25 g

ϕ 6.5		
●		
1.0 mm	2.0 mm	3.0 mm
stainless steel		
●		

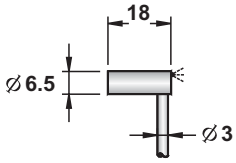

10-30VDC
<10%
<10mA
200mA
<0.01mA
-
-
<1.5V
2KHZ
0.1ms/0.1ms
<15%(Sr)
<1.0%(Sr)
IP67
-25°C - +70°C
<10%(Sr)
YES
220mA
<10ms
RFI>3V/m / EFT>1KV / ESD>4KV (contact)
IEC 60947-5-2,Part 7.4.1 / IEC 60947-5-2,Part 7.4.2
POM

FCU1-D0601N-A3X2	1	ECU1-D0602N-A3X2	1	LCU1-D0603N-A3X2
FCU1-D0601N-B3X2	2	ECU1-D0602N-B3X2	2	LCU1-D0603N-B3X2
FCU1-D0601P-A3X2	3	ECU1-D0602P-A3X2	3	LCU1-D0603P-A3X2
FCU1-D0601P-B3X2	4	ECU1-D0602P-B3X2	4	LCU1-D0603P-B3X2

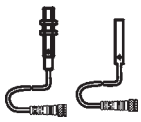

Note:
All cable type have pigtail connect mode,
*CU***/ p → pigtail mode

3 ϕ3x0.15
approx.25 g

DC ULTRA-MINI TYPE INDUCTIVE PROXIMITY SWITCH

ϕ 6.5		
●		
1.0 mm	2.0 mm	3.0 mm
stainless steel		
●		

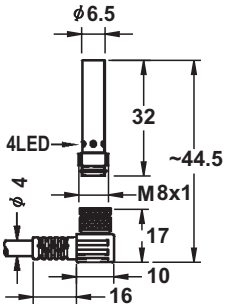

10-30VDC
<10%
<10mA
200mA
<0.01mA
-
-
<1.5V
2KHZ
0.1ms/0.1ms
<15%(Sr)
<1.0%(Sr)
IP67
-25°C - +70°C
<10%(Sr)
YES
220mA
<10ms
RFI>3V/m / EFT>1KV / ESD>4KV (contact)
IEC 60947-5-2,Part 7.4.1 / IEC 60947-5-2,Part 7.4.2
POM

FCU1-D0601N-ACR3	25	ECU1-D0602N-ACR3	25	LCU1-D0603N-ACR3
FCU1-D0601N-BCR3	25	ECU1-D0602N-BCR3	25	LCU1-D0603N-BCR3
FCU1-D0601P-ACR3	26	ECU1-D0602P-ACR3	26	LCU1-D0603P-ACR3
FCU1-D0601P-BCR3	26	ECU1-D0602P-BCR3	26	LCU1-D0603P-BCR3

Connecting cable:
M8 female pico-style,screw locking,with moulded cable.

Approx.15 g

ϕ 6.5		
●		
1.0 mm	2.0 mm	3.0 mm
stainless steel		
●		

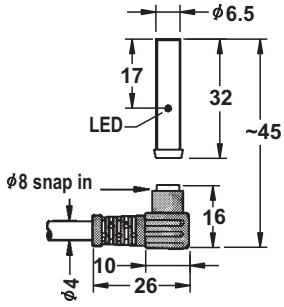

10-30VDC
<10%
<10mA
200mA
<0.01mA
-
-
<1.5V
2KHZ
0.1ms/0.1ms
<15%(Sr)
<1.0%(Sr)
IP67
-25°C - +70°C
<10%(Sr)
YES
220mA
<10ms
RFI>3V/m / EFT>1KV / ESD>4KV (contact)
IEC 60947-5-2,Part 7.4.1 / IEC 60947-5-2,Part 7.4.2
POM

FCU1-D0601N-ACR3/SN	25	ECU1-D0602N-ACR3/SN	25	LCU1-D0603N-ACR3/SN
FCU1-D0601N-BCR3/SN	25	ECU1-D0602N-BCR3/SN	25	LCU1-D0603N-BCR3/SN
FCU1-D0601P-ACR3/SN	26	ECU1-D0602P-ACR3/SN	26	LCU1-D0603P-ACR3/SN
FCU1-D0601P-BCR3/SN	26	ECU1-D0602P-BCR3/SN	26	LCU1-D0603P-BCR3/SN

Connecting cable:
female pico-style,snap-in device,with moulded cable.

Approx.15 g

DC ULTRA-MINI TYPE INDUCTIVE PROXIMITY SWITCH

M 8		
●		
1.0 mm	2.0 mm	3.0 mm
stainless steel		
●		

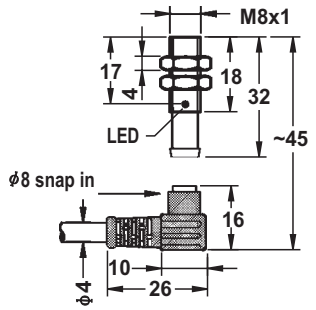

10-30VDC	
<10%	
<10mA	
200mA	
<0.01mA	
-	
-	
<1.5V	
2KHZ	
0.1ms/0.1ms	
<15%(Sr)	
<1.0%(Sr)	
IP67	
-25°C - +70°C	
<10%(Sr)	
YES	
220mA	
<10ms	
RFI>3V/m / EFT>1KV / ESD>4KV (contact)	
IEC 60947-5-2,Part 7.4.1 / IEC 60947-5-2,Part 7.4.2	
POM	

FCU1-0801N-ACR3/SN	25	ECU1-0802N-ACR3/SN	25	LCU1-0803N-ACR3/SN
FCU1-0801N-BCR3/SN	25	ECU1-0802N-BCR3/SN	25	LCU1-0803N-BCR3/SN
FCU1-0801P-ACR3/SN	26	ECU1-0802P-ACR3/SN	26	LCU1-0803P-ACR3/SN
FCU1-0801P-BCR3/SN	26	ECU1-0802P-BCR3/SN	26	LCU1-0803P-BCR3/SN

Connecting cable:
female pico-style,snap-in device,with moulded cable.

Approx.17 g

Φ8		
●		
1.0 mm	2.0 mm	3.0 mm
stainless steel		
●		

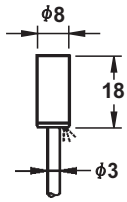

10-30VDC	
<10%	
<10mA	
200mA	
<0.01mA	
-	
-	
<1.5V	
2KHZ	
0.1ms/0.1ms	
<15%(Sr)	
<1.0%(Sr)	
IP67	
-25°C - +70°C	
<10%(Sr)	
YES	
220mA	
<10ms	
RFI>3V/m / EFT>1KV / ESD>4KV (contact)	
IEC 60947-5-2,Part 7.4.1 / IEC 60947-5-2,Part 7.4.2	
POM	

FCU1-D0801N-A3R2	1	ECU1-D0802N-A3R2	1	LCU1-D0803N-A3R2
FCU1-D0801N-B3R2	2	ECU1-D0802N-B3R2	2	LCU1-D0803N-B3R2
FCU1-D0801P-A3R2	3	ECU1-D0802P-A3R2	3	LCU1-D0803P-A3R2
FCU1-D0801P-B3R2	4	ECU1-D0802P-B3R2	4	LCU1-D0803P-B3R2

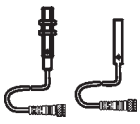

Note:
All cable type have
pigtail connect mode,
*CU***/p
└─pigtail mode

3 Φ 3x0.15
approx.25 g

DC ULTRA-MINI TYPE INDUCTIVE PROXIMITY SWITCH

ϕ8		
●		
1.0 mm	2.0 mm	3.0 mm
stainless steel		
●		

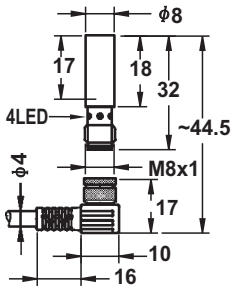

10-30VDC
<10%
<10mA
200mA
<0.01mA
-
-
<1.5V
2KHZ
0.1ms/0.1ms
<15%(Sr)
<1.0%(Sr)
IP67
-25°C - +70°C
<10%(Sr)
YES
220mA
<10ms
RFI>3V/m / EFT>1KV / ESD>4KV (contact)
IEC 60947-5-2,Part 7.4.1 / IEC 60947-5-2,Part 7.4.2
POM

FCU1-D0801N-ACR3	25	ECU1-D0802N-ACR3	25	LCU1-D0803N-ACR3
FCU1-D0801N-BCR3	25	ECU1-D0802N-BCR3	25	LCU1-D0803N-BCR3
FCU1-D0801P-ACR3	26	ECU1-D0802P-ACR3	26	LCU1-D0803P-ACR3
FCU1-D0801P-BCR3	26	ECU1-D0802P-BCR3	26	LCU1-D0803P-BCR3

Connecting cable:
M8 female pico-style,screw locking,with moulded cable.

approx.25 g

DC INDUCTIVE PROXIMITY SWITCH

ϕ6.5	
●	○
1mm , 1.5mm	2mm , 2.5mm
stainless steel	
●	

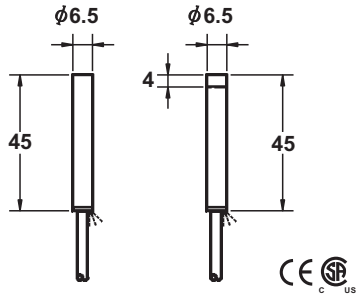

ϕ8	
●	○
1mm , 1.5mm	2mm , 2.5mm
stainless steel	
●	

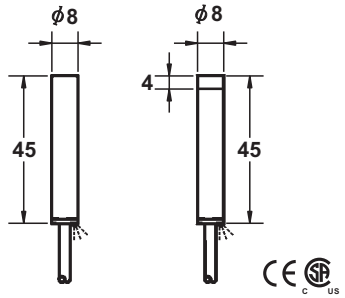

M 8	
●	○
1mm , 1.5mm	2mm , 2.5mm
stainless steel	
●	

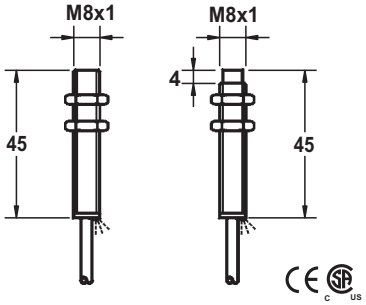

10-30VDC or 5-36VDC		
<10%		
<10mA		
200mA		
<0.01mA		
-		
-		
<1.5V(10-30V) or <1.0V(5-36V)		
2KHZ		
0.1ms/0.1ms		
<15%(Sr)		
<1.0%(Sr)		
IP67		
-25℃ - +70℃		
<10%(Sr)		
YES		
220mA		
<10ms		
RFI>3V/m / EFT>1KV / ESD>4KV (contact)		
IEC 60947-5-2,Part 7.4.1 / IEC 60947-5-2,Part 7.4.2		
POM		
FCU1-D0601N-A3U2	1	FCU2-D0602N-A3U2
FCU1-D0601N-B3U2	2	FCU2-D0602N-B3U2
FCU1-D0601P-A3U2	3	FCU2-D0602P-A3U2
FCU1-D0601P-B3U2	4	FCU2-D0602P-B3U2
FCU1-D0601N-S4U2	6	FCU2-D0602N-S4U2
FCU1-D0601P-S4U2	5	FCU2-D0602P-S4U2
FCU1-D0601C-A2U2	7	FCU2-D0602C-A2U2
FCU1-D0601C-B2U2	8	FCU2-D0602C-B2U2
ICU1-D061.5N-A3U2	1	ICU2-D062.5N-A3U2
ICU1-D061.5N-B3U2	2	ICU2-D062.5N-B3U2
ICU1-D061.5P-A3U2	3	ICU2-D062.5P-A3U2
ICU1-D061.5P-B3U2	4	ICU2-D062.5P-B3U2
ICU1-D061.5N-S4U2	6	ICU2-D062.5N-S4U2
ICU1-D061.5P-S4U2	5	ICU2-D062.5P-S4U2

FCU***
stainless steel tube

3 ϕ 3x0.15	
Approx.36 g	

10-30VDC or 5-36VDC		
<10%		
<10mA		
200mA		
<0.01mA		
-		
-		
<1.5V(10-30V) or <1.0V(5-36V)		
2KHZ		
0.1ms/0.1ms		
<15%(Sr)		
<1.0%(Sr)		
IP67		
-25℃ - +70℃		
<10%(Sr)		
YES		
220mA		
<10ms		
RFI>3V/m / EFT>1KV / ESD>4KV (contact)		
IEC 60947-5-2,Part 7.4.1 / IEC 60947-5-2,Part 7.4.2		
POM		
FCU1-D0801N-A3U2	1	FCU2-D0802N-A3U2
FCU1-D0801N-B3U2	2	FCU2-D0802N-B3U2
FCU1-D0801P-A3U2	3	FCU2-D0802P-A3U2
FCU1-D0801P-B3U2	4	FCU2-D0802P-B3U2
FCU1-D0801P-S4U2	6	FCU2-D0802P-S4U2
FCU1-D0801N-S4U2	5	FCU2-D0802N-S4U2
FCU1-D0801C-A2U2	7	FCU2-D0802C-A2U2
FCU1-D0801C-B2U2	8	FCU2-D0802C-B2U2
ICU1-D081.5N-A3U2	1	ICU2-D082.5N-A3U2
ICU1-D081.5N-B3U2	2	ICU2-D082.5N-B3U2
ICU1-D081.5P-A3U2	3	ICU2-D082.5P-A3U2
ICU1-D081.5P-B3U2	4	ICU2-D082.5P-B3U2
ICU1-D081.5P-S4U2	6	ICU2-D082.5P-S4U2
ICU1-D081.5N-S4U2	5	ICU2-D082.5N-S4U2

1. 5-36v: ICU*-******-**** type switching distance Sn=1.5mm (shielded), Sn=2.5mm (non-shielded).
2. DC 2 wire type see page 17.

3 ϕ 3x0.15	
Approx.38 g	Approx.36 g

10-30VDC or 5-36VDC		
<10%		
<10mA		
200mA		
<0.01mA		
-		
-		
<1.5V(10-30V) or <1.0V(5-36V)		
2KHZ		
0.1ms/0.1ms		
<15%(Sr)		
<1.0%(Sr)		
IP67		
-25℃ - +70℃		
<10%(Sr)		
YES		
220mA		
<10ms		
RFI>3V/m / EFT>1KV / ESD>4KV (contact)		
IEC 60947-5-2,Part 7.4.1 / IEC 60947-5-2,Part 7.4.2		
POM		
FCU1-0801N-A3U2	1	FCU2-0802N-A3U2
FCU1-0801N-B3U2	2	FCU2-0802N-B3U2
FCU1-0801P-A3U2	3	FCU2-0802P-A3U2
FCU1-0801P-B3U2	4	FCU2-0802P-B3U2
FCU1-0801P-S4U2	6	FCU2-0802P-S4U2
FCU1-0801N-S4U2	5	FCU2-0802N-S4U2
FCU1-0801C-A2U2	7	FCU2-0802C-A2U2
FCU1-0801C-B2U2	8	FCU2-0802C-B2U2
ICU1-081.5N-A3U2	1	ICU2-082.5N-A3U2
ICU1-081.5N-B3U2	2	ICU2-082.5N-B3U2
ICU1-081.5P-A3U2	3	ICU2-082.5P-A3U2
ICU1-081.5P-B3U2	4	ICU2-082.5P-B3U2
ICU1-081.5P-S4U2	6	ICU2-082.5P-S4U2
ICU1-081.5N-S4U2	5	ICU2-082.5N-S4U2

1. 5-36v: ICU*-******-**** type switching distance Sn=1.5mm (shielded), Sn=2.5mm (non-shielded).
2. DC 2 wire type see page 17.

3 ϕ 3x0.15
Approx.40 g

DC INDUCTIVE PROXIMITY SWITCH

ϕ 11		M 12		M 12	
●	○	●	○	●	○
2 mm	4 mm	2 mm	4 mm	2 mm	4 mm
stanless steel or nickel plated brass		stanless steel or nickel plated brass		stanless steel or nickel plated brass	
●		●		●	

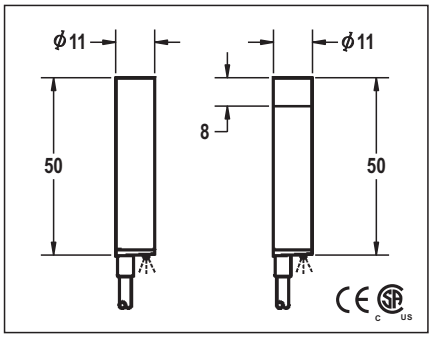

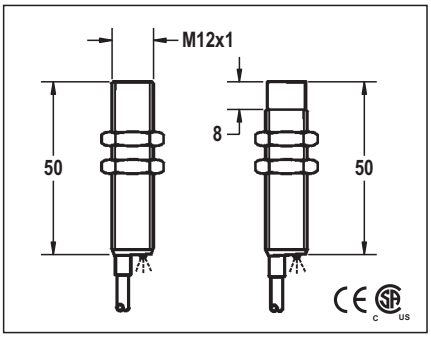

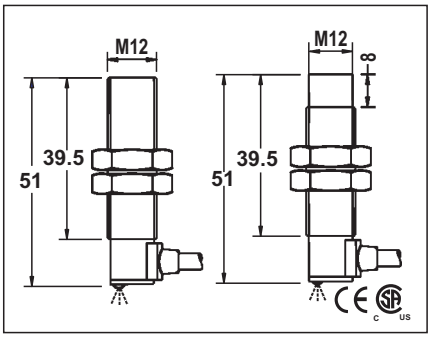

10-30VDC or 5-36VDC or 10-55VDC				10-30VDC or 5-36VDC or 10-55VDC			
<10%				<10%			
<10mA		<20mA		<10mA		<20mA	
200mA				200mA			
<0.01mA				<0.01mA			
-				-			
-				-			
<1.5V or <1.0V or <2.0V				<1.5V or <1.0V or <2.0V			
2KHZ		1KHZ		2KHZ		1KHZ	
0.1ms/0.1ms		0.2ms/0.2ms		0.1ms/0.1ms		0.2ms/0.2ms	
<15%(Sr)				<15%(Sr)			
<1.0%(Sr)				<1.0%(Sr)			
IP67				IP67			
-25°C - +70°C				-25°C - +70°C			
<10%(Sr)				<10%(Sr)			
YES				YES			
220mA				220mA			
<10ms				<10ms			
RFI>3V/m / EFT>1KV / ESD>4KV (contact)				RFI>3V/m / EFT>1KV / ESD>4KV (contact)			
IEC 60947-5-2,Part 7.4.1 / IEC 60947-5-2,Part 7.4.2				IEC 60947-5-2,Part 7.4.1 / IEC 60947-5-2,Part 7.4.2			
POM				POM		PBT	
FCM1-D1102N-A3U2	1	FCM2-D1104N-A3U2		FCM1-1202N-A3U2	1	FCM2-1204N-A3U2	
FCM1-D1102N-B3U2	2	FCM2-D1104N-B3U2		FCM1-1202N-B3U2	2	FCM2-1204N-B3U2	
FCM1-D1102P-A3U2	3	FCM2-D1104P-A3U2		FCM1-1202P-A3U2	3	FCM2-1204P-A3U2	
FCM1-D1102P-B3U2	4	FCM2-D1104P-B3U2		FCM1-1202P-B3U2	4	FCM2-1204P-B3U2	
FCM1-D1102P-S4U2	6	FCM2-D1104P-S4U2		FCM1-1202P-S4U2	6	FCM2-1204P-S4U2	
FCM1-D1102N-S4U2	2	FCM2-D1104N-S4U2		FCM1-1202N-S4U2	5	FCM2-1204N-S4U2	
FCM1-D1102C-A2U2	7	FCM2-D1104C-A2U2		FCM1-1202C-A2U2	7	FCM2-1204C-A2U2	
FCM1-D1102C-B2U2	8	FCM2-D1104C-B2U2		FCM1-1202C-B2U2	8	FCM2-1204C-B2U2	
HCM1-D1102N-A3U2	1	HCM2-D1104N-A3U2		HCM1-1202N-A3U2	1	HCM2-1204N-A3U2	
HCM1-D1102N-B3U2	2	HCM2-D1104N-B3U2		HCM1-1202N-B3U2	2	HCM2-1204N-B3U2	
HCM1-D1102P-A3U2	3	HCM2-D1104P-A3U2		HCM1-1202P-A3U2	3	HCM2-1204P-A3U2	
HCM1-D1102P-B3U2	4	HCM2-D1104P-B3U2		HCM1-1202P-B3U2	4	HCM2-1204P-B3U2	
ICM1-D1102N-A3U2	1	ICM2-D1104N-A3U2		ICM1-1202N-A3U2	1	ICM2-1204N-A3U2	
ICM1-D1102N-B3U2	2	ICM2-D1104N-B3U2		ICM1-1202N-B3U2	2	ICM2-1204N-B3U2	
ICM1-D1102P-A3U2	3	ICM2-D1104P-A3U2		ICM1-1202P-A3U2	3	ICM2-1204P-A3U2	
ICM1-D1102P-B3U2	4	ICM2-D1104P-B3U2		ICM1-1202P-B3U2	4	ICM2-1204P-B3U2	
ICM1-D1102P-S4U2	6	ICM2-D1104P-S4U2		ICM1-1202P-S4U2	6	ICM2-1204P-S4U2	
ICM1-D1102N-S4U2	2	ICM2-D1104N-S4U2		ICM1-1202N-S4U2	5	ICM2-1204N-S4U2	
Voltage drop:<1.5V(10-30V),<1V(5-36V), <2V(10-55V). following page is same.				Hxxx-xxxxx-xxxx. → DC 10-55V type no load current < 20mA. Following page is same.			
4ϕ 3x0.15				4ϕ 3x0.15			
Approx.55 g				Approx.67 g		Approx.65 g	

10-30VDC or 5-36VDC or 10-55VDC							
<10%							
<10mA		<20mA					
200mA							
<0.01mA							
-							
-							
<1.5V or <1.0V or <2.0V							
2KHZ		1KHZ					
0.1ms/0.1ms		0.2ms/0.2ms					
<15%(Sr)							
<1.0%(Sr)							
IP67							
-25°C - +70°C							
<10%(Sr)							
YES							
220mA							
<10ms							
RFI>3V/m / EFT>1KV / ESD>4KV (contact)							
IEC 60947-5-2,Part 7.4.1 / IEC 60947-5-2,Part 7.4.2							
POM						PBT	
FCM1-1202N-A3U2Y	1	FCM2-1204N-A3U2Y					
FCM1-1202N-B3U2Y	2	FCM2-1204N-B3U2Y					
FCM1-1202P-A3U2Y	3	FCM2-1204P-A3U2Y					
FCM1-1202P-B3U2Y	4	FCM2-1204P-B3U2Y					
FCM1-1202P-S4U2Y	6	FCM2-1204P-S4U2Y					
FCM1-1202N-S4U2Y	5	FCM2-1204N-S4U2Y					
FCM1-1202C-A2U2Y	7	FCM2-1204C-A2U2Y					
FCM1-1202C-B2U2Y	8	FCM2-1204C-B2U2Y					
HCM1-1202N-A3U2Y	1	HCM2-1204N-A3U2Y					
HCM1-1202N-B3U2Y	2	HCM2-1204N-B3U2Y					
HCM1-1202P-A3U2Y	3	HCM2-1204P-A3U2Y					
HCM1-1202P-B3U2Y	4	HCM2-1204P-B3U2Y					
ICM1-1202N-A3U2Y	1	ICM2-1204N-A3U2Y					
ICM1-1202N-B3U2Y	2	ICM2-1204N-B3U2Y					
ICM1-1202P-A3U2Y	3	ICM2-1204P-A3U2Y					
ICM1-1202P-B3U2Y	4	ICM2-1204P-B3U2Y					
ICM1-1202P-S4U2Y	6	ICM2-1204P-S4U2Y					
ICM1-1202N-S4U2Y	5	ICM2-1204N-S4U2Y					
4ϕ 3x0.15							
Approx.67 g		Approx.65 g					

DC INDUCTIVE PROXIMITY SWITCH

M 12		M18		M 18	
●	○	●	○	●	○
2 mm	4 mm	5 mm	8 mm	5 mm	8 mm
stanless steel or nickel plated brass		stainless steel or nickel plated brass		stainless steel or nickel plated brass	
●		●		●	

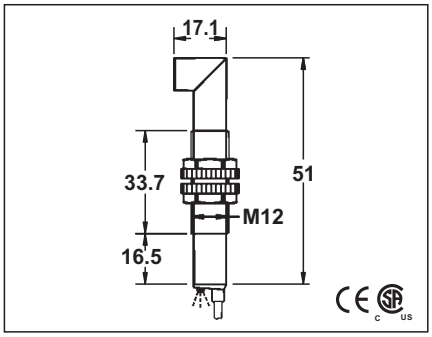

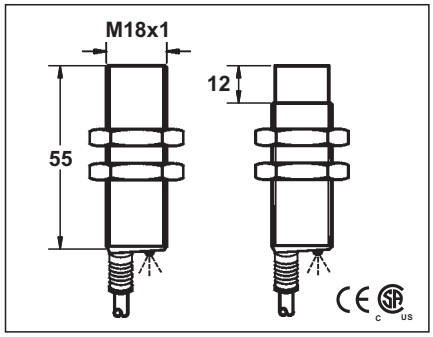

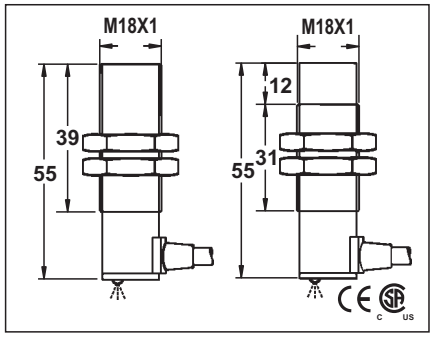

10-30VDC or 5-36VDC or 10-55VDC		10-30VDC or 5-36VDC or 10-55VDC		10-30VDC or 5-36VDC or 10-55VDC	
<10%		<10%		<10%	
<10mA	<20mA	<10mA	<20mA	<10mA	<20mA
200mA		200mA		200mA	
<0.01mA		<0.01mA		<0.01mA	
-		-		-	
-		-		-	
<1.5V or <1.0V or <2.0V		<1.5V or <1.0V or <2.0V		<1.5V or <1.0V or <2.0V	
2KHZ	1KHZ	1KHZ	500HZ	1KHZ	500HZ
0.1ms/0.1ms	0.2ms/0.2ms	0.2ms/0.2ms	0.5ms/0.5ms	0.2ms/0.2ms	0.5ms/0.5ms
<15%(Sr)		<15%(Sr)		<15%(Sr)	
<1.0%(Sr)		<1.0%(Sr)		<1.0%(Sr)	
IP67		IP67		IP67	
-25 °C - +70 °C		-25 °C - +70 °C		-25 °C - +70 °C	
<10%(Sr)		<10%(Sr)		<10%(Sr)	
YES		YES		YES	
220mA		220mA		220mA	
<10ms		<10ms		<10ms	
RFI>3V/m / EFT>1KV / ESD>4KV (contact)		RFI>3V/m / EFT>1KV / ESD>4KV (contact)		RFI>3V/m / EFT>1KV / ESD>4KV (contact)	
IEC 60947-5-2,Part 7.4.1 / IEC 60947-5-2,Part 7.4.2		IEC 60947-5-2,Part 7.4.1 / IEC 60947-5-2,Part 7.4.2		IEC 60947-5-2,Part 7.4.1 / IEC 60947-5-2,Part 7.4.2	
POM		PBT		PBT	

FCM1-1202N-A3U2Z	1	FCM2-1204N-A3U2Z	FCM1-1805N-A3U2	1	FCM2-1808N-A3U2	FCM1-1805N-A3U2Y	1	FCM2-1808N-A3U2Y
FCM1-1202N-B3U2Z	2	FCM2-1204N-B3U2Z	FCM1-1805N-B3U2	2	FCM2-1808N-B3U2	FCM1-1805N-B3U2Y	2	FCM2-1808N-B3U2Y
FCM1-1202P-A3U2Z	3	FCM2-1204P-A3U2Z	FCM1-1805P-A3U2	3	FCM2-1808P-A3U2	FCM1-1805P-A3U2Y	3	FCM2-1808P-A3U2Y
FCM1-1202P-B3U2Z	4	FCM2-1204P-B3U2Z	FCM1-1805P-B3U2	4	FCM2-1808P-B3U2	FCM1-1805P-B3U2Y	4	FCM2-1808P-B3U2Y
FCM1-1202P-S4U2Z	6	FCM2-1204P-S4U2Z	FCM1-1805P-S4U2	6	FCM2-1808P-S4U2	FCM1-1805P-S4U2Y	6	FCM2-1808P-S4U2Y
FCM1-1202N-S4U2Z	5	FCM2-1204N-S4U2Z	FCM1-1805N-S4U2	5	FCM2-1808N-S4U2	FCM1-1805N-S4U2Y	5	FCM2-1808N-S4U2Y
FCM1-1202C-A2U2Z	7	FCM2-1204C-A2U2Z	FCM1-1805C-A2U2	7	FCM2-1808C-A2U2	FCM1-1805C-A2U2Y	7	FCM2-1808C-A2U2Y
FCM1-1202C-B2U2Z	8	FCM2-1204C-B2U2Z	FCM1-1805C-B2U2	8	FCM2-1808C-B2U2	FCM1-1805C-B2U2Y	8	FCM2-1808C-B2U2Y
HCM1-1202N-A3U2Z	1	HCM2-1204N-A3U2Z	HCM1-1805N-A3U2	1	HCM2-1808N-A3U2	HCM1-1805N-A3U2Y	1	HCM2-1808N-A3U2Y
HCM1-1202N-B3U2Z	2	HCM2-1204N-B3U2Z	HCM1-1805N-B3U2	2	HCM2-1808N-B3U2	HCM1-1805N-B3U2Y	2	HCM2-1808N-B3U2Y
HCM1-1202P-A3U2Z	3	HCM2-1204P-A3U2Z	HCM1-1805P-A3U2	3	HCM2-1808P-A3U2	HCM1-1805P-A3U2Y	3	HCM2-1808P-A3U2Y
HCM1-1202P-B3U2Z	4	HCM2-1204P-B3U2Z	HCM1-1805P-B3U2	4	HCM2-1808P-B3U2	HCM1-1805P-B3U2Y	4	HCM2-1808P-B3U2Y
ICM1-1202N-A3U2Z	1	ICM2-1204N-A3U2Z	ICM1-1805N-A3U2	1	ICM2-1808N-A3U2	ICM1-1805N-A3U2Y	1	ICM2-1808N-A3U2Y
ICM1-1202N-B3U2Z	2	ICM2-1204N-B3U2Z	ICM1-1805N-B3U2	2	ICM2-1808N-B3U2	ICM1-1805N-B3U2Y	2	ICM2-1808N-B3U2Y
ICM1-1202P-A3U2Z	3	ICM2-1204P-A3U2Z	ICM1-1805P-A3U2	3	ICM2-1808P-A3U2	ICM1-1805P-A3U2Y	3	ICM2-1808P-A3U2Y
ICM1-1202P-B3U2Z	4	ICM2-1204P-B3U2Z	ICM1-1805P-B3U2	4	ICM2-1808P-B3U2	ICM1-1805P-B3U2Y	4	ICM2-1808P-B3U2Y
ICM1-1202P-S4U2Z	6	ICM2-1204P-S4U2Z	ICM1-1805P-S4U2	6	ICM2-1808P-S4U2	ICM1-1805P-S4U2Y	6	ICM2-1808P-S4U2Y
ICM1-1202N-S4U2Z	5	ICM2-1204N-S4U2Z	ICM1-1805N-S4U2	5	ICM2-1808N-S4U2	ICM1-1805N-S4U2Y	5	ICM2-1808N-S4U2Y

1. DC 2 wire type see page 17.
2. voltage drop:<1.5V(10-30V),<1V(5-36V), <2V(10-55V). following page is same.

4 ϕ 3x0.15		5.0 ϕ 44x0.1		5.0ϕ 44x0.1	
Approx.153 g	Approx.144 g	Approx.153 g	Approx.144 g	Approx.153 g	Approx.144 g

DC INDUCTIVE PROXIMITY SWITCH

M 18		M 30		Q20x32x10
●	○	●	○	●
5 mm	8 mm	10 mm	15 mm	5 mm
stainless steel or nickel plated brass		stainless steel or nickel plated brass		die-cast
●		●		●

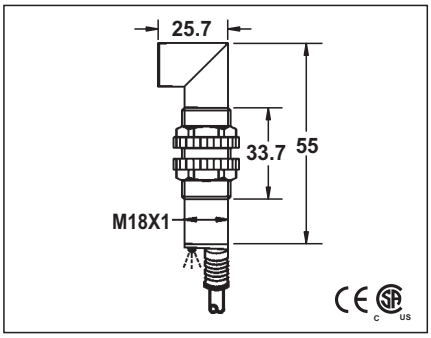

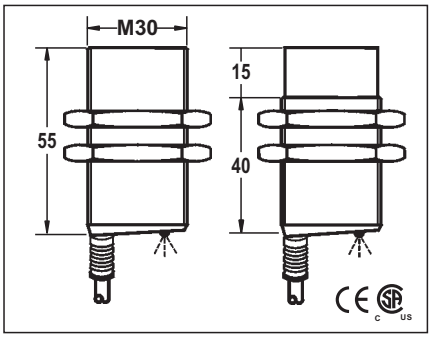

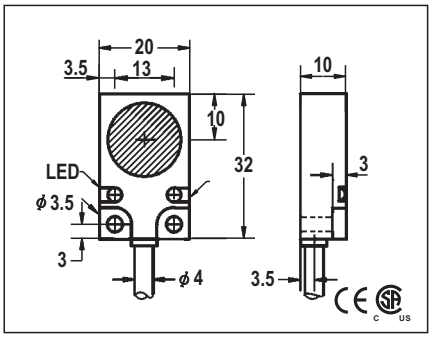

M 18		M 30		Q20x32x10	
10-30VDC or 5-36VDC or 10-55VDC		10-30VDC or 5-36VDC or 10-55VDC		10-30VDC or 5-36VDC or 10-55VDC	
<10%		<10%		<10%	
<10mA	<20mA	<10mA	<20mA	<10mA	<20mA
200mA		200mA		200mA	
<0.01mA		<0.01mA		<0.01mA	
-		-		-	
-		-		-	
<1.5V or <1.0V or <2.0V		<1.5V or <1.0V or <2.0V		<1.5V or <1.0V or <2.0V	
1KHZ	500HZ	1KHZ	500HZ	1KHZ	
0.2ms/0.2ms	0.5ms/0.5ms	0.2ms/0.2ms	0.5ms/0.5ms	0.2ms/0.2ms	
<15%(Sr)		<15%(Sr)		<15%(Sr)	
<1.0%(Sr)		<1.0%(Sr)		<1.0%(Sr)	
IP67		IP67		IP67	
-25°C - +70°C		-25°C - +70°C		-25°C - +70°C	
<10%(Sr)		<10%(Sr)		<10%(Sr)	
YES		YES		YES	
220mA		220mA		220mA	
<10ms		<10ms		<10ms	
RFI>3V/m / EFT>1KV / ESD>4KV (contact)		RFI>3V/m / EFT>1KV / ESD>4KV (contact)		RFI>3V/m / EFT>1KV / ESD>4KV (contact)	
IEC 60947-5-2,Part 7.4.1 / IEC 60947-5-2,Part 7.4.2		IEC 60947-5-2,Part 7.4.1 / IEC 60947-5-2,Part 7.4.2		IEC 60947-5-2,Part 7.4.1 / IEC 60947-5-2,Part 7.4.2	
PBT		PBT		PBT	
FCM1-1805N-A3U2Z	1	FCM2-1808N-A3U2Z	FCM1-3010N-A3U2	1	FCM2-3015N-A3U2	FQM1-2005N-A3U2T	1
FCM1-1805N-B3U2Z	2	FCM2-1808N-B3U2Z	FCM1-3010N-B3U2	2	FCM2-3015N-B3U2	FQM1-2005N-B3U2T	2
FCM1-1805P-A3U2Z	3	FCM2-1808P-A3U2Z	FCM1-3010P-A3U2	3	FCM2-3015P-A3U2	FQM1-2005P-A3U2T	3
FCM1-1805P-B3U2Z	4	FCM2-1808P-B3U2Z	FCM1-3010P-B3U2	4	FCM2-3015P-B3U2	FQM1-2005P-B3U2T	4
FCM1-1805P-S4U2Z	6	FCM2-1808P-S4U2Z	FCM1-3010P-S4U2	6	FCM2-3015P-S4U2	FQM1-2005P-S4U2T	6
FCM1-1805N-S4U2Z	5	FCM2-1808N-S4U2Z	FCM1-3010N-S4U2	5	FCM2-3015N-S4U2	FQM1-2005N-S4U2T	5
FCM1-1805C-A2U2Z	7	FCM2-1808C-A2U2Z	FCM1-3010C-A2U2	7	FCM2-3015C-A2U2	FQM1-2005C-A2U2T	7
FCM1-1805C-B2U2Z	8	FCM2-1808C-B2U2Z	FCM1-3010C-B2U2	8	FCM2-3015C-B2U2	FQM1-2005C-B2U2T	8
HCM1-1805N-A3U2Z	1	HCM2-1808N-A3U2Z	HCM1-3010N-A3U2	1	HCM2-3015N-A3U2	HQM1-2005N-A3U2T	1
HCM1-1805N-B3U2Z	2	HCM2-1808N-B3U2Z	HCM1-3010N-B3U2	2	HCM2-3015N-B3U2	HQM1-2005N-B3U2T	2
HCM1-1805P-A3U2Z	3	HCM2-1808P-A3U2Z	HCM1-3010P-A3U2	3	HCM2-3015P-A3U2	HQM1-2005P-A3U2T	3
HCM1-1805P-B3U2Z	4	HCM2-1808P-B3U2Z	HCM1-3010P-B3U2	4	HCM2-3015P-B3U2	HQM1-2005P-B3U2T	4
ICM1-1805N-A3U2Z	1	ICM2-1808N-A3U2Z	ICM1-3010N-A3U2	1	ICM2-3015N-A3U2	IQM1-2005N-A3U2T	1
ICM1-1805N-B3U2Z	2	ICM2-1808N-B3U2Z	ICM1-3010N-B3U2	2	ICM2-3015N-B3U2	IQM1-2005N-B3U2T	2
ICM1-1805P-A3U2Z	3	ICM2-1808P-A3U2Z	ICM1-3010P-A3U2	3	ICM2-3015P-A3U2	IQM1-2005P-A3U2T	3
ICM1-1805P-B3U2Z	4	ICM2-1808P-B3U2Z	ICM1-3010P-B3U2	4	ICM2-3015P-B3U2	IQM1-2005P-B3U2T	4
ICM1-1805P-S4U2Z	6	ICM2-1808P-S4U2Z	ICM1-3010P-S4U2	6	ICM2-3015P-S4U2	IQM1-2005P-S4U2T	6
ICM1-1805N-S4U2Z	5	ICM2-1808N-S4U2Z	ICM1-3010N-S4U2	5	ICM2-3015N-S4U2	IQM1-2005N-S4U2T	5
				1. DC 2 wire type see page 17. 2. voltage drop:<1.5V(10-30V),<1V(5-36V), <2V(10-55V). following page is same.	
5.0ϕ 44x0.1		5.8ϕ3x0.5		4ϕ 3x0.15	
Approx.153 g	Approx.144 g	Approx.217 g	Approx.207 g	Approx.55 g	

DC INDUCTIVE PROXIMITY SWITCH

Q25x50x10		
●		
5 mm		
die-cast		
●		

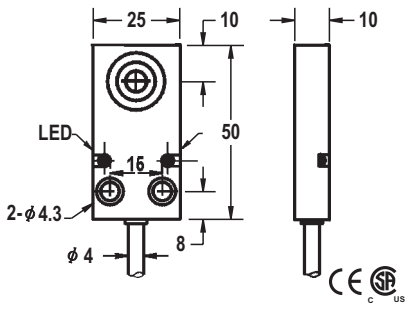

10-30VDC or 5-36VDC or 10-55VDC		
<10%		
<10mA | <20mA		
200mA		
<0.01mA		
-		
-		
<1.5V or <1.0V or <2.0V		
1KHZ		
0.2ms/0.2ms		
<15%(Sr)		
<1.0%(Sr)		
IP67		
-25°C - +70°C		
<10%(Sr)		
YES		
220mA		
<10ms		
RFI>3V/m / EFT>1KV / ESD>4KV (contact)		
IEC 60947-5-2,Part 7.4.1 / IEC 60947-5-2,Part 7.4.2		
PBT		

FQM1-2505N-A3U2T	1		
FQM1-2505N-B3U2T	2		
FQM1-2505P-A3U2T	3		
FQM1-2505P-B3U2T	4		
FQM1-2505P-S4U2T	6		
FQM1-2505N-S4U2T	5		
FQM1-2505C-A2U2T	7		
FQM1-2505C-B2U2T	8		
HQM1-2505N-A3U2T	1		
HQM1-2505N-B3U2T	2		
HQM1-2505P-A3U2T	3		
HQM1-2505P-B3U2T	4		
IQM1-2505N-A3U2T	1		
IQM1-2505N-B3U2T	2		
IQM1-2505P-A3U2T	3		
IQM1-2505P-B3U2T	4		
IQM1-2505P-S4U2T	6		
IQM1-2505N-S4U2T	5		

4ϕ3x0.15		
Approx.55 g		

DC INDUCTIVE SHORT FORM PROXIMITY SWITCH

ϕ6.5			M 8			ϕ11		
●	○		●	○		●	○	
1mm , 1.5mm	2mm , 2.5mm		1mm , 1.5mm	2mm , 2.5mm		2 mm	4 mm	
stainless steel			stainless steel			stainless steel or nickel plated brass		
●			●			●		
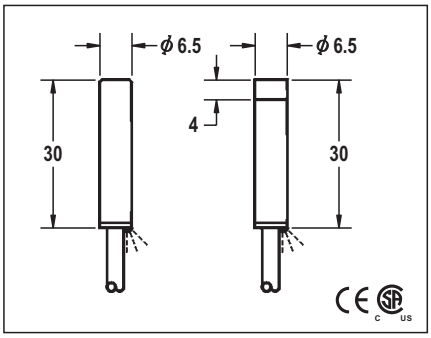			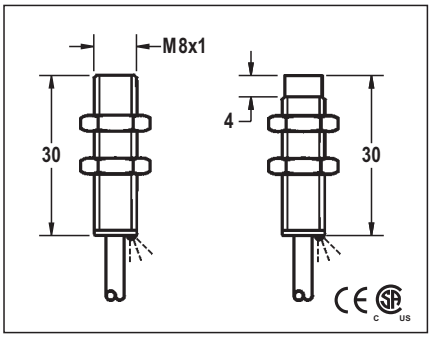			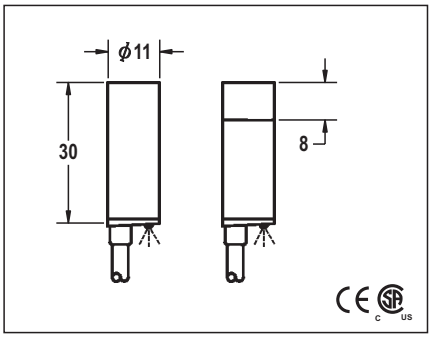		
10-30VDC or 5-36VDC			10-30VDC or 5-36VDC			10-30VDC or 5-36VDC		
<10%			<10%			<10%		
<10mA			<10mA			<10mA		
200mA			200mA			200mA		
<0.01mA			<0.01mA			<0.01mA		
-			-			-		
-			-			-		
<1.5V(10-30V) or <1.0V(5-36V)			<1.5V(10-30V) or <1.0V(5-36V)			<1.5V(10-30V) or <1.0V(5-36V)		
2KHZ			2KHZ			2KHZ	1KHZ	
0.1ms/0.1ms			0.1ms/0.1ms			0.1ms/0.1ms	0.2ms/0.2ms	
<15%(Sr)			<15%(Sr)			<15%(Sr)		
<1.0%(Sr)			<1.0%(Sr)			<1.0%(Sr)		
IP67			IP67			IP67		
-25°C - +70°C			-25°C - +70°C			-25°C - +70°C		
<10%(Sr)			<10%(Sr)			<10%(Sr)		
YES			YES			YES		
220mA			220mA			220mA		
<10ms			<10ms			<10ms		
RFI>3V/m / EFT>1KV / ESD>4KV (contact)			RFI>3V/m / EFT>1KV / ESD>4KV (contact)			RFI>3V/m / EFT>1KV / ESD>4KV (contact)		
IEC 60947-5-2,Part 7.4.1 / IEC 60947-5-2,Part 7.4.2			IEC 60947-5-2,Part 7.4.1 / IEC 60947-5-2,Part 7.4.2			IEC 60947-5-2,Part 7.4.1 / IEC 60947-5-2,Part 7.4.2		
POM			POM			POM		
FCU1-D0601N-A3S2	1	FCU2-D0602N-A3S2	FCU1-0801N-A3S2	1	FCU2-0802N-A3S2	FCM1-D1102N-A3S2	1	FCM2-D1104N-A3S2
FCU1-D0601N-B3S2	2	FCU2-D0602N-B3S2	FCU1-0801N-B3S2	2	FCU2-0802N-B3S2	FCM1-D1102N-B3S2	2	FCM2-D1104N-B3S2
FCU1-D0601P-A3S2	3	FCU2-D0602P-A3S2	FCU1-0801P-A3S2	3	FCU2-0802P-A3S2	FCM1-D1102P-A3S2	3	FCM2-D1104P-A3S2
FCU1-D0601P-B3S2	4	FCU2-D0602P-B3S2	FCU1-0801P-B3S2	4	FCU2-0802P-B3S2	FCM1-D1102P-B3S2	4	FCM2-D1104P-B3S2
ICU1-D061.5N-A3S2	1	ICU2-D062.5N-A3S2	ICU1-081.5N-A3S2	1	ICU2-082.5N-A3S2	ICM1-D1102N-A3S2	1	ICM2-D1104N-A3S2
ICU1-D061.5N-B3S2	2	ICU2-D062.5N-B3S2	ICU1-081.5N-B3S2	2	ICU2-082.5N-B3S2	ICM1-D1102N-B3S2	2	ICM2-D1104N-B3S2
ICU1-D061.5P-A3S2	3	ICU2-D062.5P-A3S2	ICU1-081.5P-A3S2	3	ICU2-082.5P-A3S2	ICM1-D1102P-A3S2	3	ICM2-D1104P-A3S2
ICU1-D061.5P-B3S2	4	ICU2-D062.5P-B3S2	ICU1-081.5P-B3S2	4	ICU2-082.5P-B3S2	ICM1-D1102P-B3S2	4	ICM2-D1104P-B3S2
						ICM1-D1102P-S4S2	6	ICM2-D1104P-S4S2
						ICM1-D1102N-S4S2	5	ICM2-D1104N-S4S2
5-36v: ICU*-******-**** type switching distance Sn=1.5mm (shielded), Sn=2.5mm (non-shielded).			5-36v: ICU*-******-**** type switching distance Sn=1.5mm (shielded), Sn=2.5mm (non-shielded).			short type changeover 5-36vDC only		
3 ϕ3x0.15			3 ϕ3x0.15			4ϕ 3x0.15		
Approx.40 g			Approx.47 g			Approx.59 g	Approx.58 g	

DC INDUCTIVE SHORT FORM PROXIMITY SWITCH

M 12		M 18		M 30	
●	○	●	○	●	○
2 mm	4 mm	5 mm	8 mm	10 mm	15 mm
stainless steel or nickel plated brass		stainless steel or nickel plated brass		stainless steel or nickel plated brass	
●		●		●	

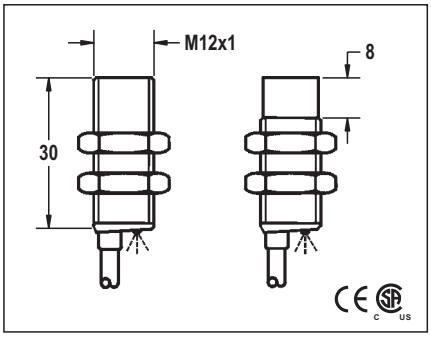

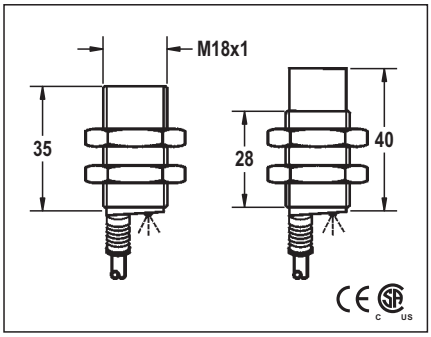

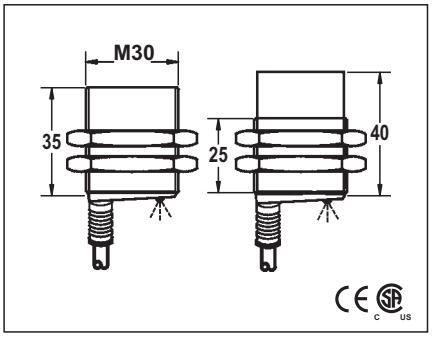

M 12		M 18		M 30	
10-30VDC or 5-36VDC		10-30VDC or 5-36VDC or 10-55VDC		10-30VDC or 5-36VDC or 10-55VDC	
<10%		<10%		<10%	
<10mA		<10mA	<20mA	<10mA	<20mA
200mA		200mA		200mA	
<0.01mA		<0.01mA		<0.01mA	
-		-		-	
-		-		-	
<1.5V(10-30V) or <1.0V(5-36V)		<1.5V or <1.0V or <2.0V		<1.5V or <1.0V or <2.0V	
2KHZ	1KHZ	1KHZ	500HZ	300HZ	150HZ
0.1ms/0.1ms	0.2ms/0.2ms	0.2ms/0.2ms	0.5ms/0.5ms	0.5ms/0.5ms	1ms/1ms
<15%(Sr)		<15%(Sr)		<15%(Sr)	
<1.0%(Sr)		<1.0%(Sr)		<1.0%(Sr)	
IP67		IP67		IP67	
-25°C - +70°C		-25°C - +70°C		-25°C - +70°C	
<10%(Sr)		<10%(Sr)		<10%(Sr)	
YES		YES		YES	
220mA		220mA		220mA	
<10ms		<10ms		<10ms	
RFI>3V/m / EFT>1KV / ESD>4KV (contact)		RFI>3V/m / EFT>1KV / ESD>4KV (contact)		RFI>3V/m / EFT>1KV / ESD>4KV (contact)	
IEC 60947-5-2,Part 7.4.1 / IEC 60947-5-2,Part 7.4.2		IEC 60947-5-2,Part 7.4.1 / IEC 60947-5-2,Part 7.4.2		IEC 60947-5-2,Part 7.4.1 / IEC 60947-5-2,Part 7.4.2	
POM	PBT	PBT		PBT	

FCM1-1202N-A3S2	1	FCM2-1204N-A3S2	FCM1-1805N-A3S2	1	FCM2-1808N-A3S2	FCM1-3010N-A3S2	1	FCM2-3015N-A3S2
FCM1-1202N-B3S2	2	FCM2-1204N-B3S2	FCM1-1805N-B3S2	2	FCM2-1808N-B3S2	FCM1-3010N-B3S2	2	FCM2-3015N-B3S2
FCM1-1202P-A3S2	3	FCM2-1204P-A3S2	FCM1-1805P-A3S2	3	FCM2-1808P-A3S2	FCM1-3010P-A3S2	3	FCM2-3015P-A3S2
FCM1-1202P-B3S2	4	FCM2-1204P-B3S2	FCM1-1805P-B3S2	4	FCM2-1808P-B3S2	FCM1-3010P-B3S2	4	FCM2-3015P-B3S2
			FCM1-1805P-S4S2	6	FCM2-1808P-S4S2	FCM1-3010P-S4S2	6	FCM2-3015P-S4S2
			FCM1-1805N-S4S2	5	FCM2-1808N-S4S2	FCM1-3010N-S4S2	5	FCM2-3015N-S4S2
FCM1-1202C-A2S2	7	FCM2-1204C-A2S2	FCM1-1805C-A2S2	7	FCM2-1808C-A2S2	FCM1-3010C-A2S2	7	FCM2-3015C-A2S2
FCM1-1202C-B2S2	8	FCM2-1204C-B2S2	FCM1-1805C-B2S2	8	FCM2-1808C-B2S2	FCM1-3010C-B2S2	8	FCM2-3015C-B2S2
			HCM1-1805N-A3S2	1	HCM2-1808N-A3S2	HCM1-3010N-A3S2	1	HCM2-3015N-A3S2
			HCM1-1805N-B3S2	2	HCM2-1808N-B3S2	HCM1-3010N-B3S2	2	HCM2-3015N-B3S2
			HCM1-1805P-A3S2	3	HCM2-1808P-A3S2	HCM1-3010P-A3S2	3	HCM2-3015P-A3S2
			HCM1-1805P-B3S2	4	HCM2-1808P-B3S2	HCM1-3010P-B3S2	4	HCM2-3015P-B3S2
ICM1-1202N-A3S2	1	ICM2-1204N-A3S2	ICM1-1805N-A3S2	1	ICM2-1808N-A3S2	ICM1-3010N-A3S2	1	ICM2-3015N-A3S2
ICM1-1202N-B3S2	2	ICM2-1204N-B3S2	ICM1-1805N-B3S2	2	ICM2-1808N-B3S2	ICM1-3010N-B3S2	2	ICM2-3015N-B3S2
ICM1-1202P-A3S2	3	ICM2-1204P-A3S2	ICM1-1805P-A3S2	3	ICM2-1808P-A3S2	ICM1-3010P-A3S2	3	ICM2-3015P-A3S2
ICM1-1202P-B3S2	4	ICM2-1204P-B3S2	ICM1-1805P-B3S2	4	ICM2-1808P-B3S2	ICM1-3010P-B3S2	4	ICM2-3015P-B3S2
ICM1-1202P-S4S2	6	ICM2-1204P-S4S2	ICM1-1805P-S4S2	6	ICM2-1808P-S4S2	ICM1-3010P-S4S2	6	ICM2-3015P-S4S2
ICM1-1202N-S4S2	5	ICM2-1204N-S4S2	ICM1-1805N-S4S2	5	ICM2-1808N-S4S2	ICM1-3010N-S4S2	5	ICM2-3015N-S4S2

M 12		M 18		M 30	
4 ϕ 3x0.15		5.0 ϕ 44x0.1		5.8 ϕ 3x0.5	
Approx.62 g	Approx.60 g	Approx.132 g	Approx.134 g	Approx.180 g	Approx.182 g

DC INDUCTIVE PLASTIC HOUSING PROXIMITY SWITCH

M 12	
●	○
2 mm	4 mm
PBT RESIN	
●	

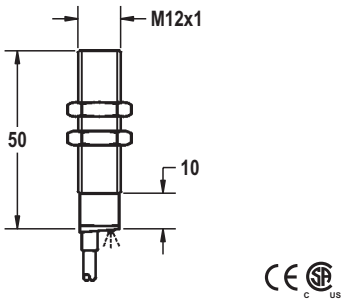

10-30VDC or 5-36VDC or 10-55VDC	
<10%	
<10mA	<20mA
200mA	
<0.01mA	
-	
-	
<1.5V or <1.0V or <2.0V	
2KHZ	1KHZ
0.1ms/0.1ms	0.2ms/0.2ms
<15%(Sr)	
<1.0%(Sr)	
IP67	
-25°C - +70°C	
<10%(Sr)	
YES	
220mA	
<10ms	
RFI>3V/m / EFT>1KV / ESD>4KV (contact)	
IEC 60947-5-2,Part 7.4.1 / IEC 60947-5-2,Part 7.4.2	
POM	

FCP1-1202N-A3U2	1	FCP2-1204N-A3U2
FCP1-1202N-B3U2	2	FCP2-1204N-B3U2
FCP1-1202P-A3U2	3	FCP2-1204P-A3U2
FCP1-1202P-B3U2	4	FCP2-1204P-B3U2
FCP1-1202P-S4U2	6	FCP2-1204P-S4U2
FCP1-1202N-S4U2	5	FCP2-1204N-S4U2
FCP1-1202C-A2U2	7	FCP2-1204C-A2U2
FCP1-1202C-B2U2	8	FCP2-1204C-B2U2
HCP1-1202N-A3U2	1	HCP2-1204N-A3U2
HCP1-1202N-B3U2	2	HCP2-1204N-B3U2
HCP1-1202P-A3U2	3	HCP2-1204P-A3U2
HCP1-1202P-B3U2	4	HCP2-1204P-B3U2
ICP1-1202N-A3U2	1	ICP2-1204N-A3U2
ICP1-1202N-B3U2	2	ICP2-1204N-B3U2
ICP1-1202P-A3U2	3	ICP2-1204P-A3U2
ICP1-1202P-B3U2	4	ICP2-1204P-B3U2
ICP1-1202P-S4U2	6	ICP2-1204P-S4U2
ICP1-1202N-S4U2	5	ICP2-1204N-S4U2

4φ 3x0.15
Approx.60 g

M 12	
●	○
2 mm	4 mm
PBT RESIN	
●	

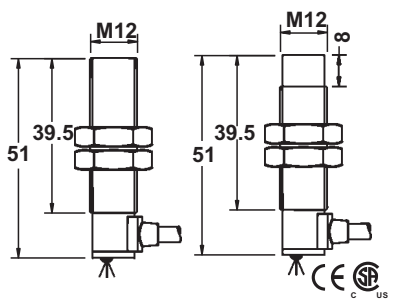

10-30VDC or 5-36VDC or 10-55VDC	
<10%	
<10mA	<20mA
200mA	
<0.01mA	
-	
-	
<1.5V or <1.0V or <2.0V	
2KHZ	1KHZ
0.1ms/0.1ms	0.2ms/0.2ms
<15%(Sr)	
<1.0%(Sr)	
IP67	
-25°C - +70°C	
<10%(Sr)	
YES	
220mA	
<10ms	
RFI>3V/m / EFT>1KV / ESD>4KV (contact)	
IEC 60947-5-2,Part 7.4.1 / IEC 60947-5-2,Part 7.4.2	
POM	PBT

FCP1-1202N-A3U2Y	1	FCP2-1204N-A3U2Y
FCP1-1202N-B3U2Y	2	FCP2-1204N-B3U2Y
FCP1-1202P-A3U2Y	3	FCP2-1204P-A3U2Y
FCP1-1202P-B3U2Y	4	FCP2-1204P-B3U2Y
FCP1-1202P-S4U2Y	6	FCP2-1204P-S4U2Y
FCP1-1202N-S4U2Y	5	FCP2-1204N-S4U2Y
FCP1-1202C-A2U2Y	7	FCP2-1204C-A2U2Y
FCP1-1202C-B2U2Y	8	FCP2-1204C-B2U2Y
HCP1-1202N-A3U2Y	1	HCP2-1204N-A3U2Y
HCP1-1202N-B3U2Y	2	HCP2-1204N-B3U2Y
HCP1-1202P-A3U2Y	3	HCP2-1204P-A3U2Y
HCP1-1202P-B3U2Y	4	HCP2-1204P-B3U2Y
ICP1-1202N-A3U2Y	1	ICP2-1204N-A3U2Y
ICP1-1202N-B3U2Y	2	ICP2-1204N-B3U2Y
ICP1-1202P-A3U2Y	3	ICP2-1204P-A3U2Y
ICP1-1202P-B3U2Y	4	ICP2-1204P-B3U2Y
ICP1-1202P-S4U2Y	6	ICP2-1204P-S4U2Y
ICP1-1202N-S4U2Y	5	ICP2-1204N-S4U2Y

4 φ 3x0.15
Approx.60 g

M 12	
●	○
2 mm	4 mm
PBT RESIN	
●	

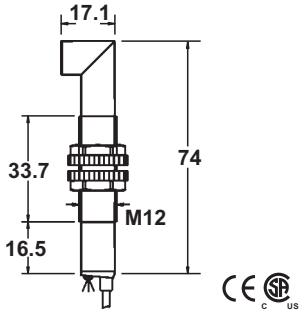

10-30VDC or 5-36VDC or 10-55VDC	
<10%	
<10mA	<20mA
200mA	
<0.01mA	
-	
-	
<1.5V or <1.0V or <2.0V	
2KHZ	1KHZ
0.1ms/0.1ms	0.2ms/0.2ms
<15%(Sr)	
<1.0%(Sr)	
IP67	
-25°C - +70°C	
<10%(Sr)	
YES	
220mA	
<10ms	
RFI>3V/m / EFT>1KV / ESD>4KV (contact)	
IEC 60947-5-2,Part 7.4.1 / IEC 60947-5-2,Part 7.4.2	
POM	

FCP1-1202N-A3U2Z	1	FCP2-1204N-A3U2Z
FCP1-1202N-B3U2Z	2	FCP2-1204N-B3U2Z
FCP1-1202P-A3U2Z	3	FCP2-1204P-A3U2Z
FCP1-1202P-B3U2Z	4	FCP2-1204P-B3U2Z
FCP1-1202P-S4U2Z	6	FCP2-1204P-S4U2Z
FCP1-1202N-S4U2Z	5	FCP2-1204N-S4U2Z
FCP1-1202C-A2U2Z	7	FCP2-1204C-A2U2Z
FCP1-1202C-B2U2Z	8	FCP2-1204C-B2U2Z
HCP1-1202N-A3U2Z	1	HCP2-1204N-A3U2Z
HCP1-1202N-B3U2Z	2	HCP2-1204N-B3U2Z
HCP1-1202P-A3U2Z	3	HCP2-1204P-A3U2Z
HCP1-1202P-B3U2Z	4	HCP2-1204P-B3U2Z
ICP1-1202N-A3U2Z	1	ICP2-1204N-A3U2Z
ICP1-1202N-B3U2Z	2	ICP2-1204N-B3U2Z
ICP1-1202P-A3U2Z	3	ICP2-1204P-A3U2Z
ICP1-1202P-B3U2Z	4	ICP2-1204P-B3U2Z
ICP1-1202P-S4U2Z	6	ICP2-1204P-S4U2Z
ICP1-1202N-S4U2Z	5	ICP2-1204N-S4U2Z

4φ 3x0.15
Approx.60 g

DC INDUCTIVE PLASTIC HOUSING PROXIMITY SWITCH

M 18	
●	○
2 mm	4 mm
PBT RESIN	
●	

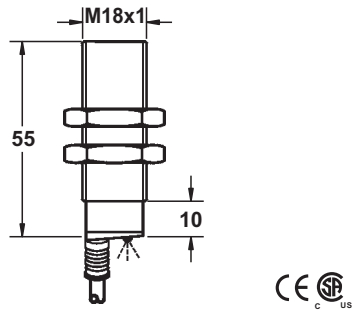

10-30VDC or 5-36VDC or 10-55VDC	
<10%	
<10mA	<20mA
200mA	
<0.01mA	
-	
-	
<1.5V or <1.0V or <2.0V	
1KHZ	500HZ
0.2ms/0.2ms	0.5ms/0.5ms
<15%(Sr)	
<1.0%(Sr)	
IP67	
-25 °C - +70 °C	
<10%(Sr)	
YES	
220mA	
<10ms	
RFI>3V/m / EFT>1KV / ESD>4KV (contact)	
IEC 60947-5-2,Part 7.4.1 / IEC 60947-5-2,Part 7.4.2	
PBT	

FCP1-1805N-A3U2	1	FCP2-1808N-A3U2
FCP1-1805N-B3U2	2	FCP2-1808N-B3U2
FCP1-1805P-A3U2	3	FCP2-1808P-A3U2
FCP1-1805P-B3U2	4	FCP2-1808P-B3U2
FCP1-1805P-S4U2	6	FCP2-1808P-S4U2
FCP1-1805N-S4U2	5	FCP2-1808N-S4U2
FCP1-1805C-A2U2	7	FCP2-1808C-A2U2
FCP1-1805C-B2U2	8	FCP2-1808C-B2U2
HCP1-1805N-A3U2	1	HCP2-1808N-A3U2
HCP1-1805N-B3U2	2	HCP2-1808N-B3U2
HCP1-1805P-A3U2	3	HCP2-1808P-A3U2
HCP1-1805P-B3U2	4	HCP2-1808P-B3U2
ICP1-1805N-A3U2	1	ICP2-1808N-A3U2
ICP1-1805N-B3U2	2	ICP2-1808N-B3U2
ICP1-1805P-A3U2	3	ICP2-1808P-A3U2
ICP1-1805P-B3U2	4	ICP2-1808P-B3U2
ICP1-1805P-S4U2	6	ICP2-1808P-S4U2
ICP1-1805N-S4U2	5	ICP2-1808N-S4U2

5.0⌀44 x 0.1
Approx.135 g

M 18	
●	○
5 mm	8 mm
PBT RESIN	
●	

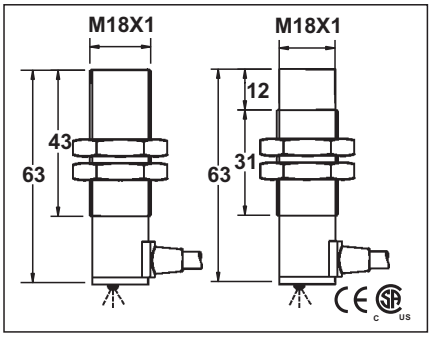

10-30VDC or 5-36VDC or 10-55VDC	
<10%	
<10mA	<20mA
200mA	
<0.01mA	
-	
-	
<1.5V or <1.0V or <2.0V	
1KHZ	500HZ
0.2ms/0.2ms	0.5ms/0.5ms
<15%(Sr)	
<1.0%(Sr)	
IP67	
-25 °C - +70 °C	
<10%(Sr)	
YES	
220mA	
<10ms	
RFI>3V/m / EFT>1KV / ESD>4KV (contact)	
IEC 60947-5-2,Part 7.4.1 / IEC 60947-5-2,Part 7.4.2	
PBT	

FCP1-1805N-A3U2Y	1	FCP2-1808N-A3U2Y
FCP1-1805N-B3U2Y	2	FCP2-1808N-B3U2Y
FCP1-1805P-A3U2Y	3	FCP2-1808P-A3U2Y
FCP1-1805P-B3U2Y	4	FCP2-1808P-B3U2Y
FCP1-1805P-S4U2Y	6	FCP2-1808P-S4U2Y
FCP1-1805N-S4U2Y	5	FCP2-1808N-S4U2Y
FCP1-1805C-A2U2Y	7	FCP2-1808C-A2U2Y
FCP1-1805C-B2U2Y	8	FCP2-1808C-B2U2Y
HCP1-1805N-A3U2Y	1	HCP2-1808N-A3U2Y
HCP1-1805N-B3U2Y	2	HCP2-1808N-B3U2Y
HCP1-1805P-A3U2Y	3	HCP2-1808P-A3U2Y
HCP1-1805P-B3U2Y	4	HCP2-1808P-B3U2Y
ICP1-1805N-A3U2Y	1	ICP2-1808N-A3U2Y
ICP1-1805N-B3U2Y	2	ICP2-1808N-B3U2Y
ICP1-1805P-A3U2Y	3	ICP2-1808P-A3U2Y
ICP1-1805P-B3U2Y	4	ICP2-1808P-B3U2Y
ICP1-1805P-S4U2Y	6	ICP2-1808P-S4U2Y
ICP1-1805N-S4U2Y	5	ICP2-1808N-S4U2Y

5.0⌀44x0.1
Approx.135 g

M 18	
●	○
5 mm	8 mm
PBT RESIN	
●	

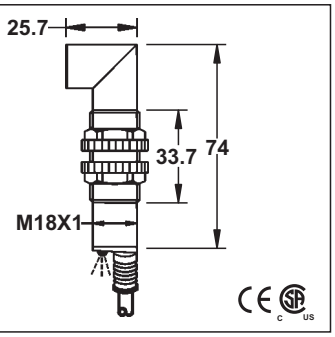

10-30VDC or 5-36VDC or 10-55VDC	
<10%	
<10mA	<20mA
200mA	
<0.01mA	
-	
-	
<1.5V or <1.0V or <2.0V	
1KHZ	500HZ
0.2ms/0.2ms	0.5ms/0.5ms
<15%(Sr)	
<1.0%(Sr)	
IP67	
-25 °C - +70 °C	
<10%(Sr)	
YES	
220mA	
<10ms	
RFI>3V/m / EFT>1KV / ESD>4KV (contact)	
IEC 60947-5-2,Part 7.4.1 / IEC 60947-5-2,Part 7.4.2	
PBT	

FCP1-1805N-A3U2Z	1	FCP2-1808N-A3U2Z
FCP1-1805N-B3U2Z	2	FCP2-1808N-B3U2Z
FCP1-1805P-A3U2Z	3	FCP2-1808P-A3U2Z
FCP1-1805P-B3U2Z	4	FCP2-1808P-B3U2Z
FCP1-1805P-S4U2Z	6	FCP2-1808P-S4U2Z
FCP1-1805N-S4U2Z	5	FCP2-1808N-S4U2Z
FCP1-1805C-A2U2Z	7	FCP2-1808C-A2U2Z
FCP1-1805C-B2U2Z	8	FCP2-1808C-B2U2Z
HCP1-1805N-A3U2Z	1	HCP2-1808N-A3U2Z
HCP1-1805N-B3U2Z	2	HCP2-1808N-B3U2Z
HCP1-1805P-A3U2Z	3	HCP2-1808P-A3U2Z
HCP1-1805P-B3U2Z	4	HCP2-1808P-B3U2Z
ICP1-1805N-A3U2Z	1	ICP2-1808N-A3U2Z
ICP1-1805N-B3U2Z	2	ICP2-1808N-B3U2Z
ICP1-1805P-A3U2Z	3	ICP2-1808P-A3U2Z
ICP1-1805P-B3U2Z	4	ICP2-1808P-B3U2Z
ICP1-1805P-S4U2Z	6	ICP2-1808P-S4U2Z
ICP1-1805N-S4U2Z	5	ICP2-1808N-S4U2Z

5.0⌀44x0.1
Approx.135 g

DC INDUCTIVE PLASTIC HOUSING PROXIMITY SWITCH

ϕ20	M 30		ϕ34
○	●	○	●
10 mm	10 mm	15 mm	20 mm
PBT RESIN	PBT RESIN		PBT RESIN
●	●		●

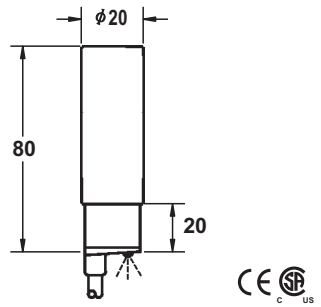

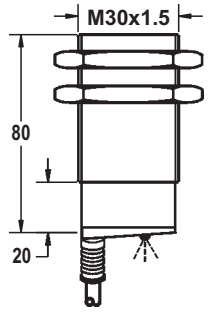

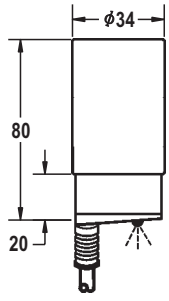

ϕ20	M 30		ϕ34
10-30VDC or 5-36VDC or 10-55VDC	10-30VDC or 5-36VDC or 10-55VDC		10-30VDC or 5-36VDC or 10-55VDC
<10%	<10%		<10%
<10mA <20mA	<10mA	<20mA	<10mA <20mA
200mA	200mA		200mA
<0.01mA	<0.01mA		<0.01mA
-	-		-
-	-		-
<1.5V or <1.0V or <2.0V	<1.5V or <1.0V or <2.0V		<1.5V or <1.0V or <2.0V
500HZ	300HZ	150HZ	150HZ
0.5ms/0.5ms	0.5ms/0.5ms	1ms/1ms	1ms/1ms
<15%(Sr)	<15%(Sr)		<15%(Sr)
<1.0%(Sr)	<1.0%(Sr)		<1.0%(Sr)
IP67	IP67		IP67
-25°C - +70°C	-25°C - +70°C		-25°C - +70°C
<10%(Sr)	<10%(Sr)		<10%(Sr)
YES	YES		YES
220mA	220mA		220mA
<10ms	<10ms		<10ms
RFI>3V/m / EFT>1KV / ESD>4KV (contact)	RFI>3V/m / EFT>1KV / ESD>4KV (contact)		RFI>3V/m / EFT>1KV / ESD>4KV (contact)
IEC 60947-5-2,Part 7.4.1 / IEC 60947-5-2,Part 7.4.2	IEC 60947-5-2,Part 7.4.1 / IEC 60947-5-2,Part 7.4.2		IEC 60947-5-2,Part 7.4.1 / IEC 60947-5-2,Part 7.4.2
POM	PBT		PBT

ϕ20		M 30			ϕ34	
FCP2-D2010N-A3U2	1	FCP1-3010N-A3U2	1	FCP2-3015N-A3U2	FCP2-D3420N-A3U2	1
FCP2-D2010N-B3U2	2	FCP1-3010N-B3U2	2	FCP2-3015N-B3U2	FCP2-D3420N-B3U2	2
FCP2-D2010P-A3U2	3	FCP1-3010P-A3U2	3	FCP2-3015P-A3U2	FCP2-D3420P-A3U2	3
FCP2-D2010P-B3U2	4	FCP1-3010P-B3U2	4	FCP2-3015P-B3U2	FCP2-D3420P-B3U2	4
FCP2-D2010P-S4U2	6	FCP1-3010P-S4U2	6	FCP2-3015P-S4U2	FCP2-D3420P-S4U2	6
FCP2-D2010N-S4U2	5	FCP1-3010N-S4U2	5	FCP2-3015N-S4U2	FCP2-D3420N-S4U2	5
FCP2-D2010C-A2U2	7	FCP1-3010C-A2U2	7	FCP2-3015C-A2U2	FCP2-D3420C-A2U2	7
FCP2-D2010C-B2U2	8	FCP1-3010C-B2U2	8	FCP2-3015C-B2U2	FCP2-D3420C-B2U2	8
HCP2-D2010N-A3U2	1	HCP1-3010N-A3U2	1	HCP2-3015N-A3U2	HCP2-D3420N-A3U2	1
HCP2-D2010N-B3U2	2	HCP1-3010N-B3U2	2	HCP2-3015N-B3U2	HCP2-D3420N-B3U2	2
HCP2-D2010P-A3U2	3	HCP1-3010P-A3U2	3	HCP2-3015P-A3U2	HCP2-D3420P-A3U2	3
HCP2-D2010P-B3U2	4	HCP1-3010P-B3U2	4	HCP2-3015P-B3U2	HCP2-D3420P-B3U2	4
ICP2-D2010N-A3U2	1	ICP1-3010N-A3U2	1	ICP2-3015N-A3U2	ICP2-D3420N-A3U2	1
ICP2-D2010N-B3U2	2	ICP1-3010N-B3U2	2	ICP2-3015N-B3U2	ICP2-D3420N-B3U2	2
ICP2-D2010P-A3U2	3	ICP1-3010P-A3U2	3	ICP2-3015P-A3U2	ICP2-D3420P-A3U2	3
ICP2-D2010P-B3U2	4	ICP1-3010P-B3U2	4	ICP2-3015P-B3U2	ICP2-D3420P-B3U2	4
ICP2-D2010P-S4U2	6	ICP1-3010P-S4U2	6	ICP2-3015P-S4U2	ICP2-D3420P-S4U2	6
ICP2-D2010N-S4U2	5	ICP1-3010N-S4U2	5	ICP2-3015N-S4U2	ICP2-D3420N-S4U2	5

ϕ20	M 30	ϕ34
5.8ϕ 3x0.5	5.8ϕ 3x0.5	5.8ϕ 3x0.5
Approx.153 g	Approx.200 g	Approx.259 g

DC INDUCTIVE PLASTIC HOUSING SHORT FORM PROXIMITY SWITCH

M 12		M 18		M 30	
●	○	●	○	●	○
2 mm	4 mm	5 mm	8 mm	10 mm	15 mm
PBT RESIN		PBT RESIN		PBT RESIN	
●		●		●	

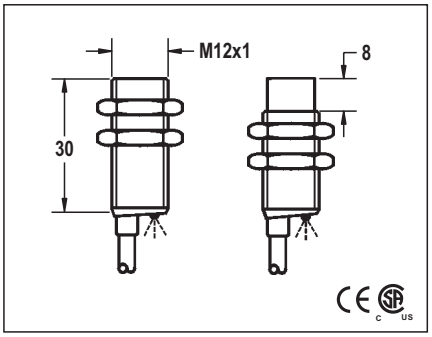

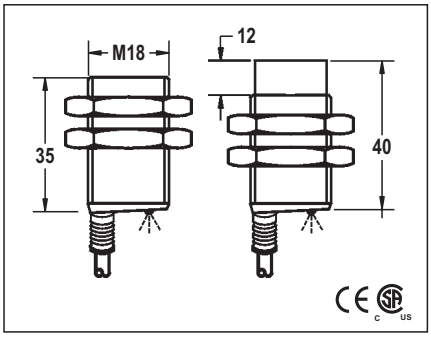

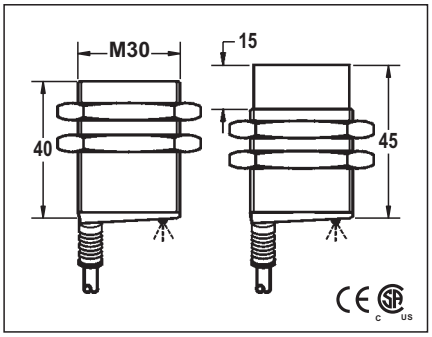

M 12		M 18		M 30	
10-30VDC		10-30VDC or 5-36VDC or 10-55VDC		10-30VDC or 5-36VDC or 10-55VDC	
<10%		<10%		<10%	
<10mA		<10mA	<20mA	<10mA	<20mA
200mA		200mA		200mA	
<0.01mA		<0.01mA		<0.01mA	
-		-		-	
-		-		-	
<1.5V		<1.5V or <1.0V or <2.0V		<1.5V or <1.0V or <2.0V	
1KHZ	500HZ	1KHZ	500HZ	300HZ	150HZ
0.2ms/0.2ms	0.5ms/0.5ms	0.2ms/0.2ms	0.5ms/0.5ms	0.5ms/0.5ms	1ms/1ms
<15%(Sr)		<15%(Sr)		<15%(Sr)	
<1.0%(Sr)		<1.0%(Sr)		<1.0%(Sr)	
IP67		IP67		IP67	
-25°C - +70°C		-25°C - +70°C		-25°C - +70°C	
<10%(Sr)		<10%(Sr)		<10%(Sr)	
YES		YES		YES	
220mA		220mA		220mA	
<10ms		<10ms		<10ms	
RFI>3V/m / EFT>1KV / ESD>4KV (contact)		RFI>3V/m / EFT>1KV / ESD>4KV (contact)		RFI>3V/m / EFT>1KV / ESD>4KV (contact)	
IEC 60947-5-2,Part 7.4.1 / IEC 60947-5-2,Part 7.4.2		IEC 60947-5-2,Part 7.4.1 / IEC 60947-5-2,Part 7.4.2		IEC 60947-5-2,Part 7.4.1 / IEC 60947-5-2,Part 7.4.2	
POM	PBT	PBT		PBT	

FCP1-1202N-A3S2	1	FCP2-1204N-A3S2	FCP1-1805N-A3S2	1	FCP2-1808N-A3S2	FCP1-3010N-A3S2	1	FCP2-3015N-A3S2
FCP1-1202N-B3S2	2	FCP2-1204N-B3S2	FCP1-1805N-B3S2	2	FCP2-1808N-B3S2	FCP1-3010N-B3S2	2	FCP2-3015N-B3S2
FCP1-1202P-A3S2	3	FCP2-1204P-A3S2	FCP1-1805P-A3S2	3	FCP2-1808P-A3S2	FCP1-3010P-A3S2	3	FCP2-3015P-A3S2
FCP1-1202P-B3S2	4	FCP2-1204P-B3S2	FCP1-1805P-B3S2	4	FCP2-1808P-B3S2	FCP1-3010P-B3S2	4	FCP2-3015P-B3S2
			FCP1-1805P-S4S2	6	FCP2-1808P-S4S2	FCP1-3010P-S4S2	6	FCP2-3015P-S4S2
			FCP1-1805N-S4S2	5	FCP2-1808N-S4S2	FCP1-3010N-S4S2	5	FCP2-3015N-S4S2
			FCP1-1805C-A2S2	7	FCP2-1808C-A2S2	FCP1-3010C-A2S2	7	FCP2-3015C-A2S2
			FCP1-1805C-B2S2	8	FCP2-1808C-B2S2	FCP1-3010C-B2S2	8	FCP2-3015C-B2S2
			HCP1-1805N-A3S2	1	HCP2-1808N-A3S2	HCP1-3010N-A3S2	1	HCP2-3015N-A3S2
			HCP1-1805N-B3S2	2	HCP2-1808N-B3S2	HCP1-3010N-B3S2	2	HCP2-3015N-B3S2
			HCP1-1805P-A3S2	3	HCP2-1808P-A3S2	HCP1-3010P-A3S2	3	HCP2-3015P-A3S2
			HCP1-1805P-B3S2	4	HCP2-1808P-B3S2	HCP1-3010P-B3S2	4	HCP2-3015P-B3S2
			ICP1-1805N-A3S2	1	ICP2-1808N-A3S2	ICP1-3010N-A3S2	1	ICP2-3015N-A3S2
			ICP1-1805N-B3S2	2	ICP2-1808N-B3S2	ICP1-3010N-B3S2	2	ICP2-3015N-B3S2
			ICP1-1805P-A3S2	3	ICP2-1808P-A3S2	ICP1-3010P-A3S2	3	ICP2-3015P-A3S2
			ICP1-1805P-B3S2	4	ICP2-1808P-B3S2	ICP1-3010P-B3S2	4	ICP2-3015P-B3S2
			ICP1-1805P-S4S2	6	ICP2-1808P-S4S2	ICP1-3010P-S4S2	6	ICP2-3015P-S4S2
			ICP1-1805N-S4S2	5	ICP2-1808N-S4S2	ICP1-3010N-S4S2	5	ICP2-3015N-S4S2

1. DC 2 wire type see page 17.
2. voltage drop:<1.5V(10-30V),<1V(5-36V), <2V(10-55V).following page is same.

M 12	M 18	M 30	
4ϕ 3x0.15	5.0ϕ 44x0.1	5.8ϕ 3x0.5	
Approx.56 g	Approx.130 g	Approx.168 g	Approx.172 g

DC INDUCTIVE PROXIMITY SWITCH CONNECTOR TYPE

ϕ6.5		
●	○	
1mm , 1.5mm	2mm , 2.5mm	
stainless steel only		
●		
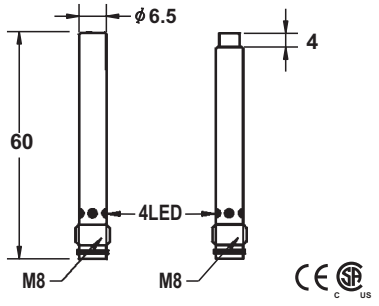		
10-30VDC or 5-36VDC		
<10%		
<10mA		
200mA		
<0.01mA		
-		
-		
<1.5V(10-30V) or <1.0V(5-36V)		
2KHZ		
0.1ms/0.1ms		
<15%(Sr)		
<1.0%(Sr)		
IP67		
-25 °C - +70 °C		
<10%(Sr)		
YES		
220mA		
<10ms		
RFI>3V/m / EFT>1KV / ESD>4KV (contact)		
IEC 60947-5-2,Part 7.4.1 / IEC 60947-5-2,Part 7.4.2		
POM		
FCU1-D0601N-ACU3	25	FCU2-D0602N-ACU3
FCU1-D0601N-BCU3	25	FCU2-D0602N-BCU3
FCU1-D0601P-ACU3	26	FCU2-D0602P-ACU3
FCU1-D0601P-BCU3	26	FCU2-D0602P-BCU3
FCU1-D0601P-SCU4	28	FCU2-D0602P-SCU4
FCU1-D0601N-SCU4	27	FCU2-D0602N-SCU4
FCU1-D0601C-ACU3	35	FCU2-D0602C-ACU3
FCU1-D0601C-BCU3	73	FCU2-D0602C-BCU3
ICU1-D061.5N-ACU3	25	ICU2-D062.5N-ACU3
ICU1-D061.5N-BCU3	25	ICU2-D062.5N-BCU3
ICU1-D061.5P-ACU3	26	ICU2-D062.5P-ACU3
ICU1-D061.5P-BCU3	26	ICU2-D062.5P-BCU3
ICU1-D061.5P-SCU4	28	ICU2-D062.5P-SCU4
ICU1-D061.5N-SCU4	27	ICU2-D062.5N-SCU4
5-36v: ICU*-******-**** type switching distance Sn=1.5mm (shielded), Sn=2.5mm (non-shielded).		
Approx.17 g	Approx.16 g	

ϕ6.5		
●	○	
1mm , 1.5mm	2mm , 2.5mm	
stainless steel only		
●		
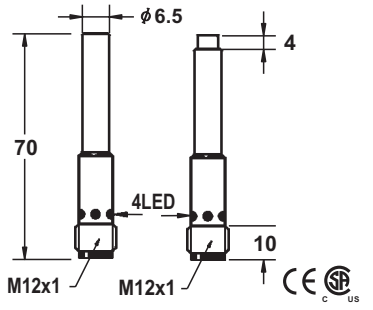		
10-30VDC or 5-36VDC		
<10%		
<10mA		
200mA		
<0.01mA		
-		
-		
<1.5V(10-30V) or <1.0V(5-36V)		
2KHZ		
0.1ms/0.1ms		
<15%(Sr)		
<1.0%(Sr)		
IP67		
-25 °C - +70 °C		
<10%(Sr)		
YES		
220mA		
<10ms		
RFI>3V/m / EFT>1KV / ESD>4KV (contact)		
IEC 60947-5-2,Part 7.4.1 / IEC 60947-5-2,Part 7.4.2		
POM		
FCU1-D0601N-ARU4	29	FCU2-D0602N-ARU4
FCU1-D0601N-BRU4	30	FCU2-D0602N-BRU4
FCU1-D0601P-ARU4	31	FCU2-D0602P-ARU4
FCU1-D0601P-BRU4	32	FCU2-D0602P-BRU4
FCU1-D0601P-SRU4	34	FCU2-D0602P-SRU4
FCU1-D0601N-SRU4	33	FCU2-D0602N-SRU4
FCU1-D0601C-ARU4	36	FCU2-D0602C-ARU4
FCU1-D0601C-BRU4	74	FCU2-D0602C-BRU4
ICU1-D061.5N-ARU4	29	ICU2-D062.5N-ARU4
ICU1-D061.5N-BRU4	30	ICU2-D062.5N-BRU4
ICU1-D061.5P-ARU4	31	ICU2-D062.5P-ARU4
ICU1-D061.5P-BRU4	32	ICU2-D062.5P-BRU4
ICU1-D061.5P-SRU4	34	ICU2-D062.5P-SRU4
ICU1-D061.5N-SRU4	33	ICU2-D062.5N-SRU4
5-36v: ICU*-******-**** type switching distance Sn=1.5mm (shielded), Sn=2.5mm (non-shielded).		
approx.25 g		

ϕ8		
●	○	
1mm , 1.5mm	2mm , 2.5mm	
stainless steel only		
●		
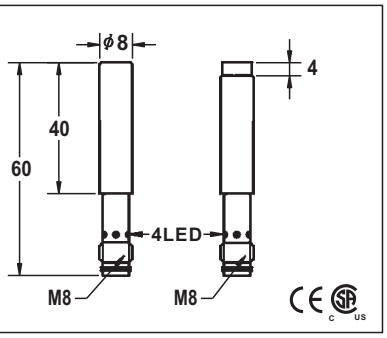		
10-30VDC or 5-36VDC		
<10%		
<10mA		
200mA		
<0.01mA		
-		
-		
<1.5V(10-30V) or <1.0V(5-36V)		
2KHZ		
0.1ms/0.1ms		
<15%(Sr)		
<1.0%(Sr)		
IP67		
-25 °C - +70 °C		
<10%(Sr)		
YES		
220mA		
<10ms		
RFI>3V/m / EFT>1KV / ESD>4KV (contact)		
IEC 60947-5-2,Part 7.4.1 / IEC 60947-5-2,Part 7.4.2		
POM		
FCU1-D0801N-ACU3	25	FCU2-D0802N-ACU3
FCU1-D0801N-BCU3	25	FCU2-D0802N-BCU3
FCU1-D0801P-ACU3	26	FCU2-D0802P-ACU3
FCU1-D0801P-BCU3	26	FCU2-D0802P-BCU3
FCU1-D0801P-SCU4	28	FCU2-D0802P-SCU4
FCU1-D0801N-SCU4	27	FCU2-D0802N-SCU4
FCU1-D0801C-ACU3	35	FCU2-D0802C-ACU3
FCU1-D0801C-BCU3	73	FCU2-D0802C-BCU3
ICU1-D081.5N-ACU3	25	ICU2-D082.5N-ACU3
ICU1-D081.5N-BCU3	25	ICU2-D082.5N-BCU3
ICU1-D081.5P-ACU3	26	ICU2-D082.5P-ACU3
ICU1-D081.5P-BCU3	26	ICU2-D082.5P-BCU3
ICU1-D081.5P-SCU4	28	ICU2-D082.5P-SCU4
ICU1-D081.5N-SCU4	27	ICU2-D082.5N-SCU4
1. 5-36v: ICU*-******-**** type switching distance Sn=1.5mm (shielded), Sn=2.5mm (non-shielded). 2. DC 2 wire type see page 17.		
Approx.15 g		

DC INDUCTIVE PROXIMITY SWITCH CONNECTOR TYPE

ϕ8			M 8			M 8		
●	○		●	○		●	○	
1mm , 1.5mm	2mm , 2.5mm		1mm , 1.5mm	2mm , 2.5mm		1mm , 1.5mm	2mm , 2.5mm	
stainless steel or niated brass			stainless steel only			stainless steel or nickel plated brass		
●			●			●		
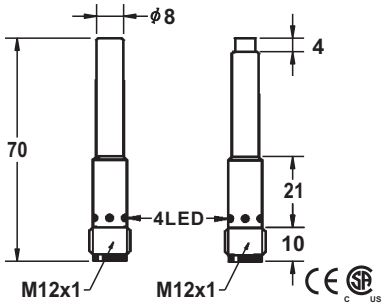			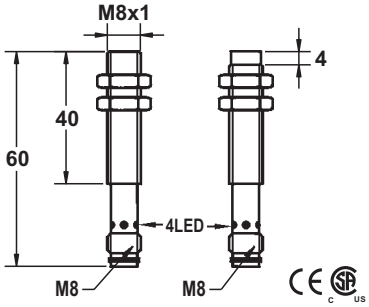			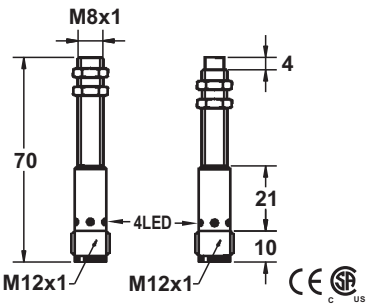		
10-30VDC or 5-36VDC			10-30VDC or 5-36VDC			10-30VDC or 5-36VDC		
<10%			<10%			<10%		
<10mA			<10mA			<10mA		
200mA			200mA			200mA		
<0.01mA			<0.01mA			<0.01mA		
-			-			-		
-			-			-		
<1.5V(10-30V) or <1.0V(5-36V)			<1.5V(10-30V) or <1.0V(5-36V)			<1.5V(10-30V) or <1.0V(5-36V)		
2KHZ			2KHZ			2KHZ		
0.1ms/0.1ms			0.1ms/0.1ms			0.1ms/0.1ms		
<15%(Sr)			<15%(Sr)			<15%(Sr)		
<1.0%(Sr)			<1.0%(Sr)			<1.0%(Sr)		
IP67			IP67			IP67		
-25 °C - +70 °C			-25 °C - +70 °C			-25 °C - +70 °C		
<10%(Sr)			<10%(Sr)			<10%(Sr)		
YES			YES			YES		
220mA			220mA			220mA		
<10ms			<10ms			<10ms		
RFI>3V/m / EFT>1KV / ESD>4KV (contact)			RFI>3V/m / EFT>1KV / ESD>4KV (contact)			RFI>3V/m / EFT>1KV / ESD>4KV (contact)		
IEC 60947-5-2,Part 7.4.1 / IEC 60947-5-2,Part 7.4.2			IEC 60947-5-2,Part 7.4.1 / IEC 60947-5-2,Part 7.4.2			IEC 60947-5-2,Part 7.4.1 / IEC 60947-5-2,Part 7.4.2		
POM			POM			POM		
FCM1-D0801N-ARU4	29	FCM2-D0802N-ARU4	FCU1-0801N-ACU3	25	FCU2-0802N-ACU3	FCM1-0801N-ARU4	29	FCM2-0802N-ARU4
FCM1-D0801N-BRU4	30	FCM2-D0802N-BRU4	FCU1-0801N-BCU3	25	FCU2-0802N-BCU3	FCM1-0801N-BRU4	30	FCM2-0802N-BRU4
FCM1-D0801P-ARU4	31	FCM2-D0802P-ARU4	FCU1-0801P-ACU3	26	FCU2-0802P-ACU3	FCM1-0801P-ARU4	31	FCM2-0802P-ARU4
FCM1-D0801P-BRU4	32	FCM2-D0802P-BRU4	FCU1-0801P-BCU3	26	FCU2-0802P-BCU3	FCM1-0801P-BRU4	32	FCM2-0802P-BRU4
FCM1-D0801P-SRU4	34	FCM2-D0802P-SRU4	FCU1-0801P-SCU4	28	FCU2-0802P-SCU4	FCM1-0801P-SRU4	34	FCM2-0802P-SRU4
FCM1-D0801N-SRU4	33	FCM2-D0802N-SRU4	FCU1-0801N-SCU4	27	FCU2-0802N-SCU4	FCM1-0801N-SRU4	33	FCM2-0802N-SRU4
FCM1-D0801C-ARU4	36	FCM2-D0802C-ARU4	FCU1-0801C-ACU3	35	FCU2-0802C-ACU3	FCM1-0801C-ARU4	36	FCM2-0802C-ARU4
FCM1-D0801C-BRU4	74	FCM2-D0802C-BRU4	FCU1-0801C-BCU3	73	FCU2-0802C-BCU3	FCM1-0801C-BRU4	74	FCM2-0802C-BRU4
ICM1-D081.5N-ARU4	29	ICM2-D082.5N-ARU4	ICU1-081.5N-ACU3	25	ICU2-082.5N-ACU3	ICM1-081.5N-ARU4	29	ICM2-082.5N-ARU4
ICM1-D081.5N-BRU4	30	ICM2-D082.5N-BRU4	ICU1-081.5N-BCU3	25	ICU2-082.5N-BCU3	ICM1-081.5N-BRU4	30	ICM2-082.5N-BRU4
ICM1-D081.5P-ARU4	31	ICM2-D082.5P-ARU4	ICU1-081.5P-ACU3	26	ICU2-082.5P-ACU3	ICM1-081.5P-ARU4	31	ICM2-082.5P-ARU4
ICM1-D081.5P-BRU4	32	ICM2-D082.5P-BRU4	ICU1-081.5P-BCU3	26	ICU2-082.5P-BCU3	ICM1-081.5P-BRU4	32	ICM2-082.5P-BRU4
ICM1-D081.5P-SRU4	34	ICM2-D082.5P-SRU4	ICU1-081.5P-SCU4	28	ICU2-082.5P-SCU4	ICM1-081.5P-SRU4	34	ICM2-082.5P-SRU4
ICM1-D081.5N-SRU4	33	ICM2-D082.5N-SRU4	ICU1-081.5N-SCU4	27	ICU2-082.5N-SCU4	ICM1-081.5N-SRU4	33	ICM2-082.5N-SRU4
1. 5-36v: switching distance Sn=1.5mm (shielded),Sn=2.5mm (non-shielded). 2. DC 2 wire type see page 17.			5-36v: switching distance Sn=1.5mm (shielded),Sn=2.5mm (non-shielded).			5-36v: switching distance Sn=1.5mm (shielded),Sn=2.5mm (non-shielded).		
Approx.28 g			Approx.15 g			Approx.22 g		

DC INDUCTIVE PROXIMITY SWITCH CONNECTOR TYPE

ϕ11		M 12		M 12	
●	○	●	○	●	○
2 mm	4 mm	2 mm	4 mm	2 mm	4 mm
stainless steel or nickel plated brass		stainless steel or nickel plated brass		stainless steel or nickel plated brass	
●		●		●	

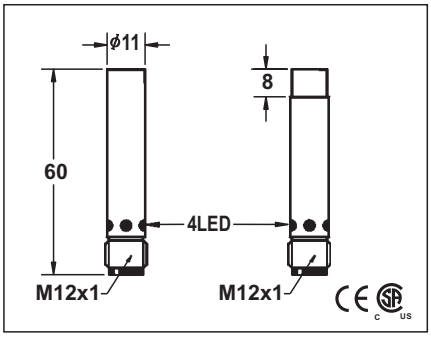

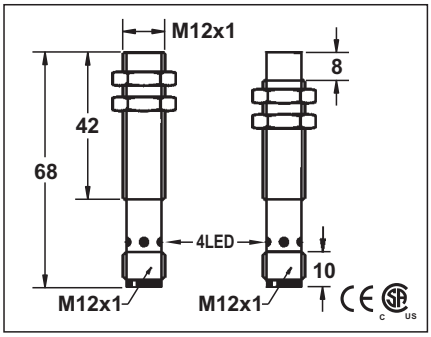

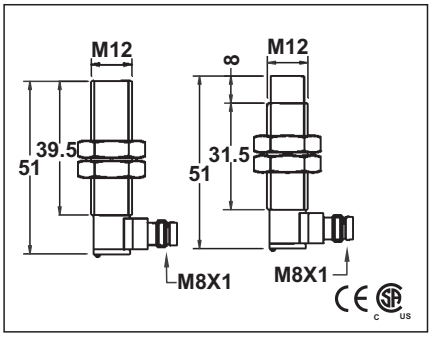

10-30VDC or 5-36VDC or 10-55VDC			10-30VDC or 5-36VDC or 10-55VDC			10-30VDC or 5-36VDC or 10-55VDC	
<10%			<10%			<10%	
<10mA	<20mA		<10mA	<20mA		<10mA	<20mA
200mA			200mA			200mA	
<0.01mA			<0.01mA			<0.01mA	
-			-			-	
-			-			-	
<1.5V or <1.0V or <2.0V			<1.5V or <1.0V or <2.0V			<1.5V or <1.0V or <2.0V	
2KHZ	1KHZ		2KHZ	1KHZ		2KHZ	1KHZ
0.1ms/0.1ms	0.2ms/0.2ms		0.1ms/0.1ms	0.2ms/0.2ms		0.1ms/0.1ms	0.2ms/0.2ms
<15%(Sr)			<15%(Sr)			<15%(Sr)	
<1.0%(Sr)			<1.0%(Sr)			<1.0%(Sr)	
IP67			IP67			IP67	
-25 ℃ - +70 ℃			-25 ℃ - +70 ℃			-25 ℃ - +70 ℃	
<10%(Sr)			<10%(Sr)			<10%(Sr)	
YES			YES			YES	
220mA			220mA			220mA	
<10ms			<10ms			<10ms	
RFI>3V/m / EFT>1KV / ESD>4KV (contact)			RFI>3V/m / EFT>1KV / ESD>4KV (contact)			RFI>3V/m / EFT>1KV / ESD>4KV (contact)	
IEC 60947-5-2,Part 7.4.1 / IEC 60947-5-2,Part 7.4.2			IEC 60947-5-2,Part 7.4.1 / IEC 60947-5-2,Part 7.4.2			IEC 60947-5-2,Part 7.4.1 / IEC 60947-5-2,Part 7.4.2	
POM			POM		PBT	POM	PBT
FCM1-D1102N-ARU4	29	FCM2-D1104N-ARU4	FCM1-1202N-ARU4	29	FCM2-1204N-ARU4	FCM1-1202N-ACU3Y	29	FCM2-1204N-ACU3Y
FCM1-D1102N-BRU4	30	FCM2-D1104N-BRU4	FCM1-1202N-BRU4	30	FCM2-1204N-BRU4	FCM1-1202N-BCU3Y	30	FCM2-1204N-BCU3Y
FCM1-D1102P-ARU4	31	FCM2-D1104P-ARU4	FCM1-1202P-ARU4	31	FCM2-1204P-ARU4	FCM1-1202P-ACU3Y	31	FCM2-1204P-ACU3Y
FCM1-D1102P-BRU4	32	FCM2-D1104P-BRU4	FCM1-1202P-BRU4	32	FCM2-1204P-BRU4	FCM1-1202P-BCU3Y	32	FCM2-1204P-BCU3Y
FCM1-D1102P-SRU4	34	FCM2-D1104P-SRU4	FCM1-1202P-SRU4	34	FCM2-1204P-SRU4	FCM1-1202P-SCU4Y	34	FCM2-1204P-SCU4Y
FCM1-D1102N-SRU4	33	FCM2-D1104N-SRU4	FCM1-1202N-SRU4	33	FCM2-1204N-SRU4	FCM1-1202N-SCU4Y	33	FCM2-1204N-SCU4Y
FCM1-D1102C-ARU4	36	FCM2-D1104C-ARU4	FCM1-1202C-ARU4	36	FCM2-1204C-ARU4	FCM1-1202C-ACU3Y	36	FCM2-1204C-ACU3Y
FCM1-D1102C-BRU4	74	FCM2-D1104C-BRU4	FCM1-1202C-BRU4	74	FCM2-1204C-BRU4	FCM1-1202C-BCU3Y	74	FCM2-1204C-BCU3Y
HCM1-D1102N-ARU4	29	HCM2-D1104N-ARU4	HCM1-1202N-ARU4	29	HCM2-1204N-ARU4	HCM1-1202N-ACU3Y	29	HCM2-1204N-ACU3Y
HCM1-D1102N-BRU4	30	HCM2-D1104N-BRU4	HCM1-1202N-BRU4	30	HCM2-1204N-BRU4	HCM1-1202N-BCU3Y	30	HCM2-1204N-BCU3Y
HCM1-D1102P-ARU4	31	HCM2-D1104P-ARU4	HCM1-1202P-ARU4	31	HCM2-1204P-ARU4	HCM1-1202P-ACU3Y	31	HCM2-1204P-ACU3Y
HCM1-D1102P-BRU4	32	HCM2-D1104P-BRU4	HCM1-1202P-BRU4	32	HCM2-1204P-BRU4	HCM1-1202P-BCU3Y	32	HCM2-1204P-BCU3Y
ICM1-D1102N-ARU4	29	ICM2-D1104N-ARU4	ICM1-1202N-ARU4	29	ICM2-1204N-ARU4	ICM1-1202N-ACU3Y	29	ICM2-1204N-ACU3Y
ICM1-D1102N-BRU4	30	ICM2-D1104N-BRU4	ICM1-1202N-BRU4	30	ICM2-1204N-BRU4	ICM1-1202N-BCU3Y	30	ICM2-1204N-BCU3Y
ICM1-D1102P-ARU4	31	ICM2-D1104P-ARU4	ICM1-1202P-ARU4	31	ICM2-1204P-ARU4	ICM1-1202P-ACU3Y	31	ICM2-1204P-ACU3Y
ICM1-D1102P-BRU4	32	ICM2-D1104P-BRU4	ICM1-1202P-BRU4	32	ICM2-1204P-BRU4	ICM1-1202P-BCU3Y	32	ICM2-1204P-BCU3Y
ICM1-D1102P-SRU4	34	ICM2-D1104P-SRU4	ICM1-1202P-SRU4	34	ICM2-1204P-SRU4	ICM1-1202P-SCU4Y	34	ICM2-1204P-SCU4Y
ICM1-D1102N-SRU4	33	ICM2-D1104N-SRU4	ICM1-1202N-SRU4	33	ICM2-1204N-SRU4	ICM1-1202N-SCU4Y	33	ICM2-1204N-SCU4Y
						1. DC 2 wire type see page 17. 2. voltage drop:<1.5V(10-30V),<1V(5-36V), <2V(10-55V). 3. 10-55V type: no load current < 20mA.		
Approx.30 g	Approx.29 g		Approx.31 g	Approx.30 g		Approx.31 g	Approx.30 g	

DC INDUCTIVE PROXIMITY SWITCH CONNECTOR TYPE

M 12	
●	○
2 mm	4 mm
stainless steel or nickel plated brass	
●	

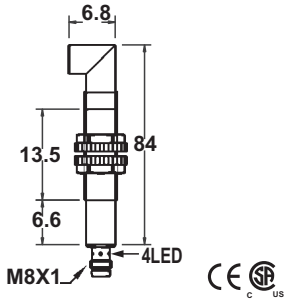

10-30VDC or 5-36VDC or 10-55VDC	
<10%	
<10mA	<20mA
200mA	
<0.01mA	
-	
-	
<1.5V or <1.0V or <2.0V	
2KHZ	1KHZ
0.1ms/0.1ms	0.2ms/0.2ms
<15%(Sr)	
<1.0%(Sr)	
IP67	
-25 °C - +70 °C	
<10%(Sr)	
YES	
220mA	
<10ms	
RFI>3V/m / EFT>1KV / ESD>4KV (contact)	
IEC 60947-5-2,Part 7.4.1 / IEC 60947-5-2,Part 7.4.2	
POM	

FCM1-1202N-ACU3Z	29	FCM2-1204N-ACU3Z
FCM1-1202N-BCU3Z	30	FCM2-1204N-BCU3Z
FCM1-1202P-ACU3Z	31	FCM2-1204P-ACU3Z
FCM1-1202P-BCU3Z	32	FCM2-1204P-BCU3Z
FCM1-1202P-SCU4Z	34	FCM2-1204P-SCU4Z
FCM1-1202N-SCU4Z	33	FCM2-1204N-SCU4Z
FCM1-1202C-ACU3Z	36	FCM2-1204C-ACU3Z
FCM1-1202C-BCU3Z	74	FCM2-1204C-BCU3Z
HCM1-1202N-ACU3Z	29	HCM2-1204N-ACU3Z
HCM1-1202N-BCU3Z	30	HCM2-1204N-BCU3Z
HCM1-1202P-ACU3Z	31	HCM2-1204P-ACU3Z
HCM1-1202P-BCU3Z	32	HCM2-1204P-BCU3Z
ICM1-1202N-ACU3Z	29	ICM2-1204N-ACU3Z
ICM1-1202N-BCU3Z	30	ICM2-1204N-BCU3Z
ICM1-1202P-ACU3Z	31	ICM2-1204P-ACU3Z
ICM1-1202P-BCU3Z	32	ICM2-1204P-BCU3Z
ICM1-1202P-SCU4Z	34	ICM2-1204P-SCU4Z
ICM1-1202N-SCU4Z	33	ICM2-1204N-SCU4Z

Approx.31 g	Approx.30 g

M 18	
●	○
5 mm	8 mm
stainless steel or nickel plated brass	
●	

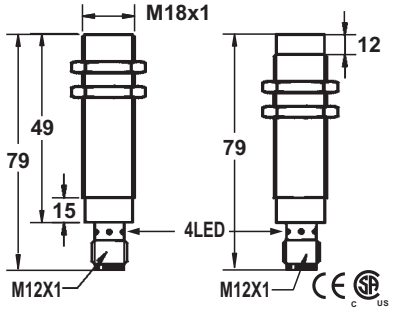

10-30VDC or 5-36VDC or 10-55VDC	
<10%	
<10mA	<20mA
200mA	
<0.01mA	
-	
-	
<1.5V or <1.0V or <2.0V	
1KHZ	500HZ
0.2ms/0.2ms	0.5ms/0.5ms
<15%(Sr)	
<1.0%(Sr)	
IP67	
-25 °C - +70 °C	
<10%(Sr)	
YES	
220mA	
<10ms	
RFI>3V/m / EFT>1KV / ESD>4KV (contact)	
IEC 60947-5-2,Part 7.4.1 / IEC 60947-5-2,Part 7.4.2	
PBT	

FCM1-1805N-ARU4	29	FCM2-1808N-ARU4
FCM1-1805N-BRU4	30	FCM2-1808N-BRU4
FCM1-1805P-ARU4	31	FCM2-1808P-ARU4
FCM1-1805P-BRU4	32	FCM2-1808P-BRU4
FCM1-1805P-SRU4	34	FCM2-1808P-SRU4
FCM1-1805N-SRU4	33	FCM2-1808N-SRU4
FCM1-1805C-ARU4	36	FCM2-1808C-ARU4
FCM1-1805C-BRU4	74	FCM2-1808C-BRU4
HCM1-1805N-ARU4	29	HCM2-1808N-ARU4
HCM1-1805N-BRU4	30	HCM2-1808N-BRU4
HCM1-1805P-ARU4	31	HCM2-1808P-ARU4
HCM1-1805P-BRU4	32	HCM2-1808P-BRU4
ICM1-1805N-ARU4	29	ICM2-1808N-ARU4
ICM1-1805N-BRU4	30	ICM2-1808N-BRU4
ICM1-1805P-ARU4	31	ICM2-1808P-ARU4
ICM1-1805P-BRU4	32	ICM2-1808P-BRU4
ICM1-1805P-SRU4	34	ICM2-1808P-SRU4
ICM1-1805N-SRU4	33	ICM2-1808N-SRU4

1. DC 2 wire type see page 17.
2. voltage drop:<1.5V(10-30V),<1V(5-36V), <2V(10-55V).
3. 10-55V type: no load current < 20mA.

Approx.94 g	Approx.91 g

M 18	
●	○
5 mm	8 mm
stainless steel or nickel plated brass	
●	

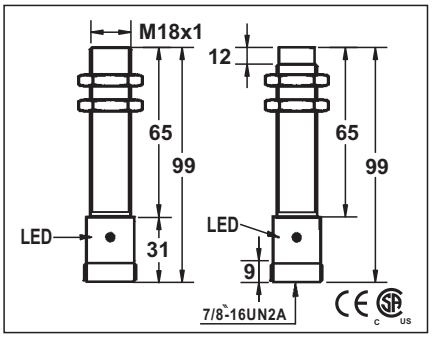

10-30VDC or 5-36VDC or 10-55VDC	
<10%	
<10mA	<20mA
200mA	
<0.01mA	
-	
-	
<1.5V or <1.0V or <2.0V	
1KHZ	500HZ
0.2ms/0.2ms	0.5ms/0.5ms
<15%(Sr)	
<1.0%(Sr)	
IP67	
-25 °C - +70 °C	
<10%(Sr)	
YES	
220mA	
<10ms	
RFI>3V/m / EFT>1KV / ESD>4KV (contact)	
IEC 60947-5-2,Part 7.4.1 / IEC 60947-5-2,Part 7.4.2	
PBT	

FCM1-1805N-AZU4	37	FCM2-1808N-AZU4
FCM1-1805N-BZU4	38	FCM2-1808N-BZU4
FCM1-1805P-AZU4	39	FCM2-1808P-AZU4
FCM1-1805P-BZU4	40	FCM2-1808P-BZU4
FCM1-1805P-SZU4	42	FCM2-1808P-SZU4
FCM1-1805N-SZU4	41	FCM2-1808N-SZU4
FCM1-1805C-AZU4	43	FCM2-1808C-AZU4
FCM1-1805C-BZU4	75	FCM2-1808C-BZU4
HCM1-1805N-AZU4	37	HCM2-1808N-AZU4
HCM1-1805N-BZU4	38	HCM2-1808N-BZU4
HCM1-1805P-AZU4	39	HCM2-1808P-AZU4
HCM1-1805P-BZU4	40	HCM2-1808P-BZU4
ICM1-1805N-AZU4	37	ICM2-1808N-AZU4
ICM1-1805N-BZU4	38	ICM2-1808N-BZU4
ICM1-1805P-AZU4	39	ICM2-1808P-AZU4
ICM1-1805P-BZU4	40	ICM2-1808P-BZU4
ICM1-1805P-SZU4	42	ICM2-1808P-SZU4
ICM1-1805N-SZU4	41	ICM2-1808N-SZU4

Approx.94 g	Approx.91 g

DC INDUCTIVE PROXIMITY SWITCH CONNECTOR TYPE

M 18	
●	○
5 mm	8 mm
stainless steel or nickel plated brass	
●	

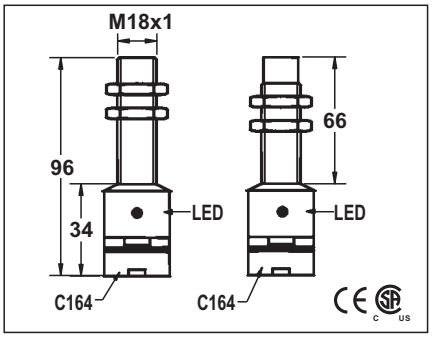

10-30VDC or 5-36VDC or 10-55VDC		
<10%		
<10mA	<20mA	
200mA		
<0.01mA		
-		
-		
<1.5V or <1.0V or <2.0V		
1KHZ	500HZ	
0.2ms/0.2ms	0.5ms/0.5ms	
<15%(Sr)		
<1.0%(Sr)		
IP67		
-25 °C - +70 °C		
<10%(Sr)		
YES		
220mA		
<10ms		
RFI>3V/m / EFT>1KV / ESD>4KV (contact)		
IEC 60947-5-2,Part 7.4.1 / IEC 60947-5-2,Part 7.4.2		
PBT		
FCM1-1805N-AYU5	45	FCM2-1808N-AYU5
FCM1-1805N-BYU5	46	FCM2-1808N-BYU5
FCM1-1805P-AYU5	47	FCM2-1808P-AYU5
FCM1-1805P-BYU5	48	FCM2-1808P-BYU5
FCM1-1805P-SYU5	50	FCM2-1808P-SYU5
FCM1-1805N-SYU5	49	FCM2-1808N-SYU5
FCM1-1805C-AYU5	44	FCM2-1808C-AYU5
FCM1-1805C-BYU5	76	FCM2-1808C-BYU5
HCM1-1805N-AYU5	45	HCM2-1808N-AYU5
HCM1-1805N-BYU5	46	HCM2-1808N-BYU5
HCM1-1805P-AYU5	47	HCM2-1808P-AYU5
HCM1-1805P-BYU5	48	HCM2-1808P-BYU5
ICM1-1805N-AYU5	45	ICM2-1808N-AYU5
ICM1-1805N-BYU5	46	ICM2-1808N-BYU5
ICM1-1805P-AYU5	47	ICM2-1808P-AYU5
ICM1-1805P-BYU5	48	ICM2-1808P-BYU5
ICM1-1805P-SYU5	50	ICM2-1808P-SYU5
ICM1-1805N-SYU5	49	ICM2-1808N-SYU5
Approx.159 g	Approx.155 g	

M 18	
●	○
5 mm	8 mm
stainless steel or nickel plated brass	
●	

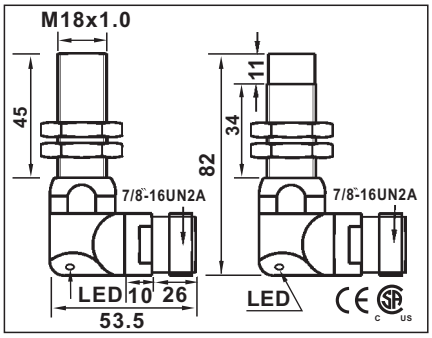

10-30VDC or 5-36VDC or 10-55VDC		
<10%		
<10mA	<20mA	
200mA		
<0.01mA		
-		
-		
<1.5V or <1.0V or <2.0V		
1KHZ	500HZ	
0.2ms/0.2ms	0.5ms/0.5ms	
<15%(Sr)		
<1.0%(Sr)		
IP67		
-25 °C - +70 °C		
<10%(Sr)		
YES		
220mA		
<10ms		
RFI>3V/m / EFT>1KV / ESD>4KV (contact)		
IEC 60947-5-2,Part 7.4.1 / IEC 60947-5-2,Part 7.4.2		
PBT		
FCM1-1805N-AZU4Y	29	FCM2-1808N-AZU4Y
FCM1-1805N-BZU4Y	30	FCM2-1808N-BZU4Y
FCM1-1805P-AZU4Y	31	FCM2-1808P-AZU4Y
FCM1-1805P-BZU4Y	32	FCM2-1808P-BZU4Y
FCM1-1805P-SZU4Y	34	FCM2-1808P-SZU4Y
FCM1-1805N-SZU4Y	33	FCM2-1808N-SZU4Y
FCM1-1805C-AZU4Y	36	FCM2-1808C-AZU4Y
FCM1-1805C-BZU4Y	74	FCM2-1808C-BZU4Y
HCM1-1805N-AZU4Y	29	HCM2-1808N-AZU4Y
HCM1-1805N-BZU4Y	30	HCM2-1808N-BZU4Y
HCM1-1805P-AZU4Y	31	HCM2-1808P-AZU4Y
HCM1-1805P-BZU4Y	32	HCM2-1808P-BZU4Y
ICM1-1805N-AZU4Y	29	ICM2-1808N-AZU4Y
ICM1-1805N-BZU4Y	30	ICM2-1808N-BZU4Y
ICM1-1805P-AZU4Y	31	ICM2-1808P-AZU4Y
ICM1-1805P-BZU4Y	32	ICM2-1808P-BZU4Y
ICM1-1805P-SZU4Y	34	ICM2-1808P-SZU4Y
ICM1-1805N-SZU4Y	33	ICM2-1808N-SZU4Y
FCM*-*****-*Z**Y Z=7/8"-16UN2A R=M12x1		
Approx.251 g	Approx.283 g	

M 18	
●	○
5 mm	8 mm
stainless steel or nickel plated brass	
●	

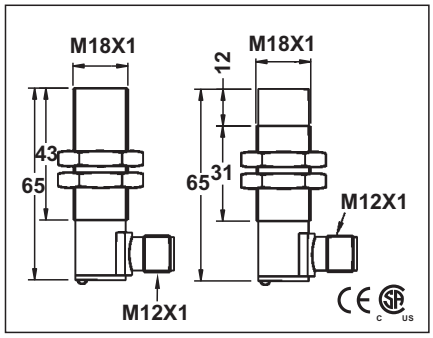

10-30VDC or 5-36VDC or 10-55VDC		
<10%		
<10mA	<20mA	
200mA		
<0.01mA		
-		
-		
<1.5V or <1.0V or <2.0V		
1KHZ	500HZ	
0.2ms/0.2ms	0.5ms/0.5ms	
<15%(Sr)		
<1.0%(Sr)		
IP67		
-25 °C - +70 °C		
<10%(Sr)		
YES		
220mA		
<10ms		
RFI>3V/m / EFT>1KV / ESD>4KV (contact)		
IEC 60947-5-2,Part 7.4.1 / IEC 60947-5-2,Part 7.4.2		
PBT		
FCM1-1805N-ARU4Y	29	FCM2-1808N-ARU4Y
FCM1-1805N-BRU4Y	30	FCM2-1808N-BRU4Y
FCM1-1805P-ARU4Y	31	FCM2-1808P-ARU4Y
FCM1-1805P-BRU4Y	32	FCM2-1808P-BRU4Y
FCM1-1805P-SRU4Y	34	FCM2-1808P-SRU4Y
FCM1-1805N-SRU4Y	33	FCM2-1808N-SRU4Y
FCM1-1805C-ARU4Y	36	FCM2-1808C-ARU4Y
FCM1-1805C-BRU4Y	74	FCM2-1808C-BRU4Y
HCM1-1805N-ARU4Y	29	HCM2-1808N-ARU4Y
HCM1-1805N-BRU4Y	30	HCM2-1808N-BRU4Y
HCM1-1805P-ARU4Y	31	HCM2-1808P-ARU4Y
HCM1-1805P-BRU4Y	32	HCM2-1808P-BRU4Y
ICM1-1805N-ARU4Y	29	ICM2-1808N-ARU4Y
ICM1-1805N-BRU4Y	30	ICM2-1808N-BRU4Y
ICM1-1805P-ARU4Y	31	ICM2-1808P-ARU4Y
ICM1-1805P-BRU4Y	32	ICM2-1808P-BRU4Y
ICM1-1805P-SRU4Y	34	ICM2-1808P-SRU4Y
ICM1-1805N-SRU4Y	33	ICM2-1808N-SRU4Y
1. DC 2 wire type see page 17. 2. voltage drop:<1.5V(10-30V),<1V(5-36V), <2V(10-55V). 3. 10-55V type: no load current < 20mA.		
Approx.94 g	Approx.91 g	

DC INDUCTIVE PROXIMITY SWITCH CONNECTOR TYPE

M 18			M 30			M 30		
●	○		●	○		●	○	
5 mm	8 mm		10 mm	15 mm		10 mm	15 mm	
stainless steel or nickel plated brass			stainless steel or nickel plated brass			stainless steel or nickel plated brass		
●			●			●		
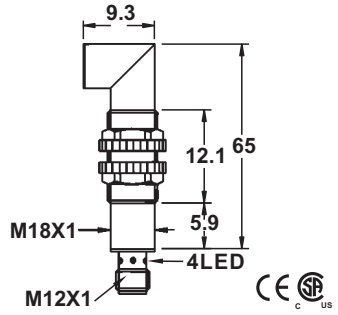			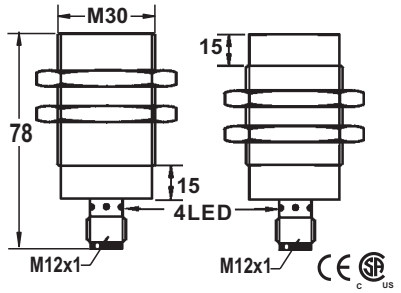			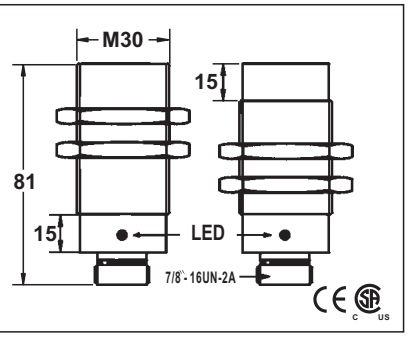		
10-30VDC or 5-36VDC or 10-55VDC			10-30VDC or 5-36VDC or 10-55VDC			10-30VDC or 5-36VDC or 10-55VDC		
<10%			<10%			<10%		
<10mA	<20mA		<10mA	<20mA		<10mA	<20mA	
200mA			200mA			200mA		
<0.01mA			<0.01mA			<0.01mA		
-			-			-		
-			-			-		
<1.5V or <1.0V or <2.0V			<1.5V or <1.0V or <2.0V			<1.5V or <1.0V or <2.0V		
1KHZ	500HZ		300HZ	150HZ		0.5ms/0.5ms	1ms/1ms	
0.2ms/0.2ms	0.5ms/0.5ms		0.5ms/0.5ms	1ms/1ms		300HZ	150HZ	
<15%(Sr)			<15%(Sr)			<15%(Sr)		
<1.0%(Sr)			<1.0%(Sr)			<1.0%(Sr)		
IP67			IP67			IP67		
-25°C - +70°C			-25°C - +70°C			-25°C - +70°C		
<10%(Sr)			<10%(Sr)			<10%(Sr)		
YES			YES			YES		
220mA			220mA			220mA		
<10ms			<10ms			<10ms		
RFI>3V/m / EFT>1KV / ESD>4KV (contact)			RFI>3V/m / EFT>1KV / ESD>4KV (contact)			RFI>3V/m / EFT>1KV / ESD>4KV (contact)		
IEC 60947-5-2,Part 7.4.1 / IEC 60947-5-2,Part 7.4.2			IEC 60947-5-2,Part 7.4.1 / IEC 60947-5-2,Part 7.4.2			IEC 60947-5-2,Part 7.4.1 / IEC 60947-5-2,Part 7.4.2		
PBT			PBT			PBT		
FCM1-1805N-ARU4Z	29	FCM2-1808N-ARU4Z	FCM1-3010N-ARU4	29	FCM2-3015N-ARU4	FCM1-3010N-AZU4	37	FCM2-3015N-AZU4
FCM1-1805N-BRU4Z	30	FCM2-1808N-BRU4Z	FCM1-3010N-BRU4	30	FCM2-3015N-BRU4	FCM1-3010N-BZU4	38	FCM2-3015N-BZU4
FCM1-1805P-ARU4Z	31	FCM2-1808P-ARU4Z	FCM1-3010P-ARU4	31	FCM2-3015P-ARU4	FCM1-3010P-AZU4	39	FCM2-3015P-AZU4
FCM1-1805P-BRU4Z	32	FCM2-1808P-BRU4Z	FCM1-3010P-BRU4	32	FCM2-3015P-BRU4	FCM1-3010P-BZU4	40	FCM2-3015P-BZU4
FCM1-1805P-SRU4Z	34	FCM2-1808P-SRU4Z	FCM1-3010P-SRU4	34	FCM2-3015P-SRU4	FCM1-3010P-SZU4	42	FCM2-3015P-SZU4
FCM1-1805N-SRU4Z	33	FCM2-1808N-SRU4Z	FCM1-3010N-SRU4	33	FCM2-3015N-SRU4	FCM1-3010N-SZU4	41	FCM2-3015N-SZU4
FCM1-1805C-ARU4Z	36	FCM2-1808C-ARU4Z	FCM1-3010C-ARU4	36	FCM2-3015C-ARU4	FCM1-3010C-AZU4	43	FCM2-3015C-AZU4
FCM1-1805C-BRU4Z	74	FCM2-1808C-BRU4Z	FCM1-3010C-BRU4	74	FCM2-3015C-BRU4	FCM1-3010C-BZU4	75	FCM2-3015C-BZU4
HCM1-1805N-ARU4Z	29	HCM2-1808N-ARU4Z	HCM1-3010N-ARU4	29	HCM2-3015N-ARU4	HCM1-3010N-AZU4	37	HCM2-3015N-AZU4
HCM1-1805N-BRU4Z	30	HCM2-1808N-BRU4Z	HCM1-3010N-BRU4	30	HCM2-3015N-BRU4	HCM1-3010N-BZU4	38	HCM2-3015N-BZU4
HCM1-1805P-ARU4Z	31	HCM2-1808P-ARU4Z	HCM1-3010P-ARU4	31	HCM2-3015P-ARU4	HCM1-3010P-AZU4	39	HCM2-3015P-AZU4
HCM1-1805P-BRU4Z	32	HCM2-1808P-BRU4Z	HCM1-3010P-BRU4	32	HCM2-3015P-BRU4	HCM1-3010P-BZU4	40	HCM2-3015P-BZU4
ICM1-1805N-ARU4Z	29	ICM2-1808N-ARU4Z	ICM1-3010N-ARU4	29	ICM2-3015N-ARU4	ICM1-3010N-AZU4	37	ICM2-3015N-AZU4
ICM1-1805N-BRU4Z	30	ICM2-1808N-BRU4Z	ICM1-3010N-BRU4	30	ICM2-3015N-BRU4	ICM1-3010N-BZU4	38	ICM2-3015N-BZU4
ICM1-1805P-ARU4Z	31	ICM2-1808P-ARU4Z	ICM1-3010P-ARU4	31	ICM2-3015P-ARU4	ICM1-3010P-AZU4	39	ICM2-3015P-AZU4
ICM1-1805P-BRU4Z	32	ICM2-1808P-BRU4Z	ICM1-3010P-BRU4	32	ICM2-3015P-BRU4	ICM1-3010P-BZU4	40	ICM2-3015P-BZU4
ICM1-1805P-SRU4Z	34	ICM2-1808P-SRU4Z	ICM1-3010P-SRU4	34	ICM2-3015P-SRU4	ICM1-3010P-SZU4	42	ICM2-3015P-SZU4
ICM1-1805N-SRU4Z	33	ICM2-1808N-SRU4Z	ICM1-3010N-SRU4	33	ICM2-3015N-SRU4	ICM1-3010N-SZU4	41	ICM2-3015N-SZU4
						1. DC 2 wire type see page 17. 2. voltage drop:<1.5V(10-30V),<1V(5-36V), <2V(10-55V). 3. 10-55V type: no load current < 20mA.		
Approx.94 g	Approx.91 g		Approx.187 g	Approx.179 g		Approx.187 g	Approx.179 g	

DC INDUCTIVE PROXIMITY SWITCH CONNECTOR TYPE

M 30		Q25x50x10
●	○	●
10 mm	15 mm	5 mm
stainless steel or nickel plated brass		die-cast
●		●

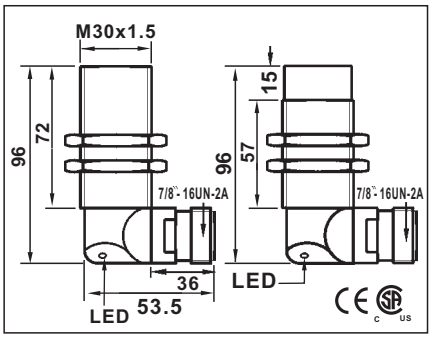

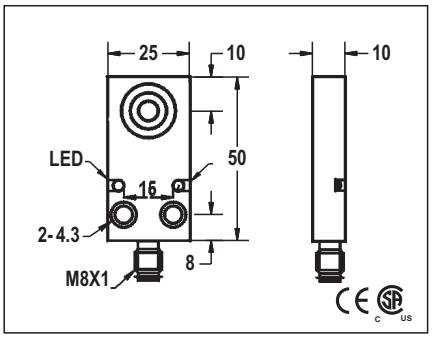

10-30VDC or 5-36VDC or 10-55VDC		10-30VDC or 5-36VDC or 10-55VDC
<10%		<10%
<10mA	<20mA	<10mA <20mA
200mA		200mA
<0.01mA		<0.01mA
-		-
-		-
<1.5V or <1.0V or <2.0V		<1.5V or <1.0V or <2.0V
0.5ms/0.5ms	1ms/1ms	1KHZ
300HZ	150HZ	0.2ms/0.2ms
<15%(Sr)		<15%(Sr)
<1.0%(Sr)		<1.0%(Sr)
IP67		IP67
-25°C - +70°C		-25°C - +70°C
<10%(Sr)		<10%(Sr)
YES		YES
220mA		220mA
<10ms		<10ms
RFI>3V/m / EFT>1KV / ESD>4KV (contact)		RFI>3V/m / EFT>1KV / ESD>4KV (contact)
IEC 60947-5-2,Part 7.4.1 / IEC 60947-5-2,Part 7.4.2		IEC 60947-5-2,Part 7.4.1 / IEC 60947-5-2,Part 7.4.2
PBT		POM

FCM1-3010N-AZU4Y	37	FCM2-3015N-AZU4Y	FQM1-2505N-ACU3	25
FCM1-3010N-BZU4Y	38	FCM2-3015N-BZU4Y	FQM1-2505N-BCU3	25
FCM1-3010P-AZU4Y	39	FCM2-3015P-AZU4Y	FQM1-2505P-ACU3	26
FCM1-3010P-BZU4Y	40	FCM2-3015P-BZU4Y	FQM1-2505P-BCU3	26
FCM1-3010P-SZU4Y	42	FCM2-3015P-SZU4Y	FQM1-2505P-SCU4	28
FCM1-3010N-SZU4Y	41	FCM2-3015N-SZU4Y	FQM1-2505N-SCU4	27
FCM1-3010C-AZU4Y	43	FCM2-3015C-AZU4Y	FQM1-2505C-ACU3	35
FCM1-3010C-BZU4Y	75	FCM2-3015C-BZU4Y	FQM1-2505C-BCU3	73
HCM1-3010N-AZU4Y	37	HCM2-3015N-AZU4Y	HQM1-2505N-ACU3	25
HCM1-3010N-BZU4Y	38	HCM2-3015N-BZU4Y	HQM1-2505N-BCU3	25
HCM1-3010P-AZU4Y	39	HCM2-3015P-AZU4Y	HQM1-2505P-ACU3	26
HCM1-3010P-BZU4Y	40	HCM2-3015P-BZU4Y	HQM1-2505P-BCU3	26
ICM1-3010N-AZU4Y	37	ICM2-3015N-AZU4Y	IQM1-2505N-ACU3	25
ICM1-3010N-BZU4Y	38	ICM2-3015N-BZU4Y	IQM1-2505N-BCU3	25
ICM1-3010P-AZU4Y	39	ICM2-3015P-AZU4Y	IQM1-2505P-ACU3	26
ICM1-3010P-BZU4Y	40	ICM2-3015P-BZU4Y	IQM1-2505P-BCU3	26
ICM1-3010P-SZU4Y	42	ICM2-3015P-SZU4Y	IQM1-2505P-SCU4	28
ICM1-3010N-SZU4Y	41	ICM2-3015N-SZU4Y	IQM1-2505N-SCU4	27

FCM*-*****-*Z**Y

Z=7/8"-16UN2A

R=M12X1

Approx.311 g	Approx.356 g	Approx.61 g

DC INDUCTIVE SHORT FORM PROXIMITY SWITCH CONNECTOR TYPE

ϕ 6.5		
●	○	
1 mm , 1.5mm	2 mm , 2.5mm	
stainless steel only		
●		
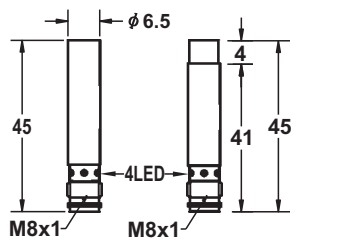		
10-30VDC or 5-36VDC		
<10%		
<10mA		
200mA		
<0.01mA		
-		
-		
<1.5V(10-30V) or <1.0V(5-36V)		
2KHZ		
0.1ms/0.1ms		
<15%(Sr)		
<1.0%(Sr)		
IP67		
-25 °C - +70 °C		
<10%(Sr)		
YES		
220mA		
<10ms		
RFI>3V/m / EFT>1KV / ESD>4KV (contact)		
IEC 60947-5-2,Part 7.4.1 / IEC 60947-5-2,Part 7.4.2		
POM		
FCU1-D0601N-ACS3	25	FCU2-D0602N-ACS3
FCU1-D0601N-BCS3	25	FCU2-D0602N-BCS3
FCU1-D0601P-ACS3	26	FCU2-D0602P-ACS3
FCU1-D0601P-BCS3	26	FCU2-D0602P-BCS3
ICU1-D061.5N-ACS3	25	ICU2-D062.5N-ACS3
ICU1-D061.5N-BCS3	25	ICU2-D062.5N-BCS3
ICU1-D061.5P-ACS3	26	ICU2-D062.5P-ACS3
ICU1-D061.5P-BCS3	26	ICU2-D062.5P-BCS3
5-36v: ICU*-******-**** type switching distance Sn=1.5mm (shielded), Sn=2.5mm (non-shielded).		
Approx.14 g		

ϕ 6.5		
●	○	
1 mm , 1.5mm	2 mm , 2.5mm	
stainless steel only		
●		
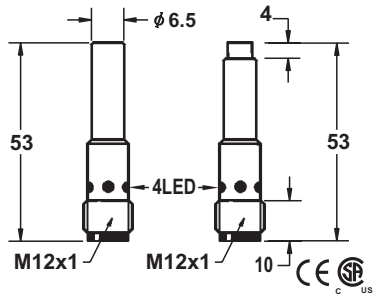		
10-30VDC or 5-36VDC		
<10%		
<10mA		
200mA		
<0.01mA		
-		
-		
<1.5V(10-30V) or <1.0V(5-36V)		
2KHZ		
0.1ms/0.1ms		
<15%(Sr)		
<1.0%(Sr)		
IP67		
-25 °C - +70 °C		
<10%(Sr)		
YES		
220mA		
<10ms		
RFI>3V/m / EFT>1KV / ESD>4KV (contact)		
IEC 60947-5-2,Part 7.4.1 / IEC 60947-5-2,Part 7.4.2		
POM		
FCM1-D0601N-ARS4	29	FCM2-D0602N-ARS4
FCM1-D0601N-BRS4	30	FCM2-D0602N-BRS4
FCM1-D0601P-ARS4	31	FCM2-D0602P-ARS4
FCM1-D0601P-BRS4	32	FCM2-D0602P-BRS4
ICM1-D061.5N-ARS4	29	ICM2-D062.5N-ARS4
ICM1-D061.5N-BRS4	30	ICM2-D062.5N-BRS4
ICM1-D061.5P-ARS4	31	ICM2-D062.5P-ARS4
ICM1-D061.5P-BRS4	32	ICM2-D062.5P-BRS4
5-36v: ICU*-******-**** type switching distance Sn=1.5mm (shielded), Sn=2.5mm (non-shielded).		
Approx.20 g		

M 8		
●	○	
1 mm , 1.5mm	2 mm , 2.5mm	
stainless steel only		
●		
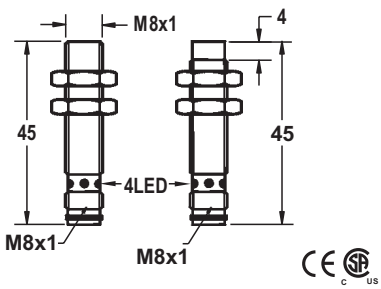		
10-30VDC or 5-36VDC		
<10%		
<10mA		
200mA		
<0.01mA		
-		
-		
<1.5V(10-30V) or <1.0V(5-36V)		
2KHZ		
0.1ms/0.1ms		
<15%(Sr)		
<1.0%(Sr)		
IP67		
-25 °C - +70 °C		
<10%(Sr)		
YES		
220mA		
<10ms		
RFI>3V/m / EFT>1KV / ESD>4KV (contact)		
IEC 60947-5-2,Part 7.4.1 / IEC 60947-5-2,Part 7.4.2		
POM		
FCU1-0801N-ACS3	25	FCU2-0802N-ACS3
FCU1-0801N-BCS3	25	FCU2-0802N-BCS3
FCU1-0801P-ACS3	26	FCU2-0802P-ACS3
FCU1-0801P-BCS3	26	FCU2-0802P-BCS3
ICU1-081.5N-ACS3	25	ICU2-082.5N-ACS3
ICU1-081.5N-BCS3	25	ICU2-082.5N-BCS3
ICU1-081.5P-ACS3	26	ICU2-082.5P-ACS3
ICU1-081.5P-BCS3	26	ICU2-082.5P-BCS3
5-36v: ICU*-******-**** type switching distance Sn=1.5mm (shielded), Sn=2.5mm (non-shielded).		
Approx.12 g		

DC INDUCTIVE SHORT FORM PROXIMITY SWITCH CONNECTOR TYPE

M 8			Φ11			M 12		
●	○		●	○		●	○	
1 mm , 1.5mm	2 mm , 2.5mm		2 mm	4 mm		2 mm	4 mm	
stainless steel or nickel plated brass			stainless steel or nickel plated brass			stainless steel or nickel plated brass		
●			●			●		
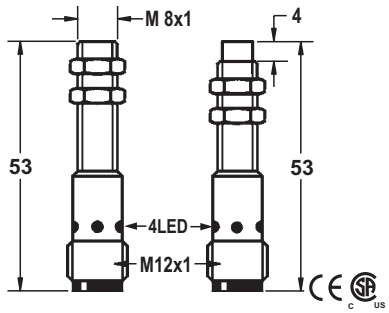			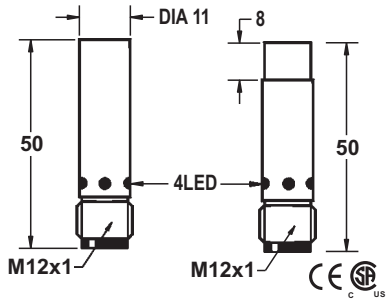			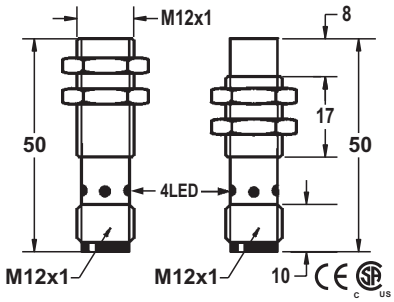		
10-30VDC or 5-36VDC			10-30VDC or 5-36VDC			10-30VDC or 5-36VDC		
<10%			<10%			<10%		
<10mA			<10mA			<10mA		
200mA			200mA			200mA		
<0.01mA			<0.01mA			<0.01mA		
-			-			-		
-			-			-		
<1.5V(10-30V) or <1.0V(5-36V)			<1.5V(10-30V) or <1.0V(5-36V)			<1.5V(10-30V) or <1.0V(5-36V)		
2KHZ			2KHZ	1KHZ		2KHZ	1KHZ	
0.1ms/0.1ms			0.1ms/0.1ms	0.2ms/0.2ms		0.1ms/0.1ms	0.2ms/0.2ms	
<15%(Sr)			<15%(Sr)			<15%(Sr)		
<1.0%(Sr)			<1.0%(Sr)			<1.0%(Sr)		
IP67			IP67			IP67		
-25°C - +70°C			-25°C - +70°C			-25°C - +70°C		
<10%(Sr)			<10%(Sr)			<10%(Sr)		
YES			YES			YES		
220mA			220mA			220mA		
<10ms			<10ms			<10ms		
RFI>3V/m / EFT>1KV / ESD>4KV (contact)			RFI>3V/m / EFT>1KV / ESD>4KV (contact)			RFI>3V/m / EFT>1KV / ESD>4KV (contact)		
IEC 60947-5-2,Part 7.4.1 / IEC 60947-5-2,Part 7.4.2			IEC 60947-5-2,Part 7.4.1 / IEC 60947-5-2,Part 7.4.2			IEC 60947-5-2,Part 7.4.1 / IEC 60947-5-2,Part 7.4.2		
POM			POM			POM	PBT	
FCM1-0801N-ARS4	29	FCM2-0802N-ARS4	FCM1-D1102N-ARS4	29	FCM2-D1104N-ARS4	FCM1-1202N-ARS4	29	FCM2-1204N-ARS4
FCM1-0801N-BRS4	30	FCM2-0802N-BRS4	FCM1-D1102N-BRS4	30	FCM2-D1104N-BRS4	FCM1-1202N-BRS4	30	FCM2-1204N-BRS4
FCM1-0801P-ARS4	31	FCM2-0802P-ARS4	FCM1-D1102P-ARS4	31	FCM2-D1104P-ARS4	FCM1-1202P-ARS4	31	FCM2-1204P-ARS4
FCM1-0801P-BRS4	32	FCM2-0802P-BRS4	FCM1-D1102P-BRS4	32	FCM2-D1104P-BRS4	FCM1-1202P-BRS4	32	FCM2-1204P-BRS4
ICM1-0801.5N-ARS4	29	ICM2-0802.5N-ARS4	ICM1-D1102N-ARS4	29	ICM2-D1104N-ARS4	ICM1-1202N-ARS4	29	ICM2-1204N-ARS4
ICM1-0801.5N-BRS4	30	ICM2-0802.5N-BRS4	ICM1-D1102N-BRS4	30	ICM2-D1104N-BRS4	ICM1-1202N-BRS4	30	ICM2-1204N-BRS4
ICM1-0801.5P-ARS4	31	ICM2-0802.5P-ARS4	ICM1-D1102P-ARS4	31	ICM2-D1104P-ARS4	ICM1-1202P-ARS4	31	ICM2-1204P-ARS4
ICM1-0801.5P-BRS4	32	ICM2-0802.5P-BRS4	ICM1-D1102P-BRS4	32	ICM2-D1104P-BRS4	ICM1-1202P-BRS4	32	ICM2-1204P-BRS4
			ICM1-D1102P-SRS4	34	ICM2-D1104P-SRS4	ICM1-1202P-SRS4	34	ICM2-1204P-SRS4
			ICM1-D1102N-SRS4	33	ICM2-D1104N-SRS4	ICM1-1202N-SRS4	33	ICM2-1204N-SRS4
5-36v: switching distance Sn=1.5mm (shielded),Sn=2.5mm (non-shielded).			short type changeover 5-36vDC only.			short type changeover 5-36vDC only.		
Approx.17 g			Approx.24 g			approx.25 g	Approx.23 g	

DC INDUCTIVE SHORT FORM PROXIMITY SWITCH CONNECTOR TYPE

M 18		M 30		20X32X10	
●	○	●	○	●	○
5 mm	8 mm	10 mm	15 mm	15 mm	20 mm
stainless steel or nickel plated brass		stainless steel or nickel plated brass		die-cast	
●		●		●	

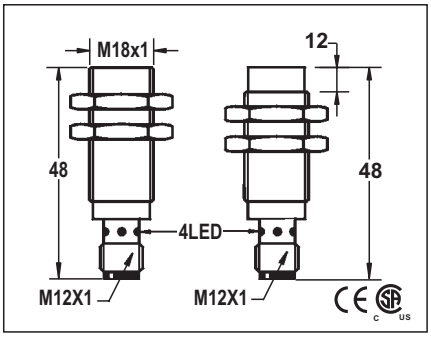

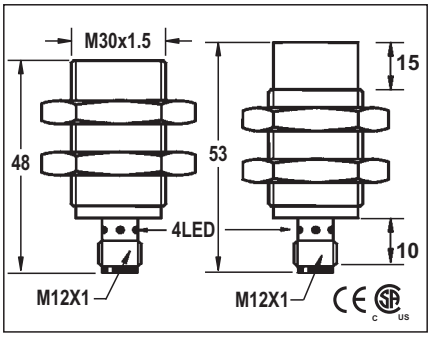

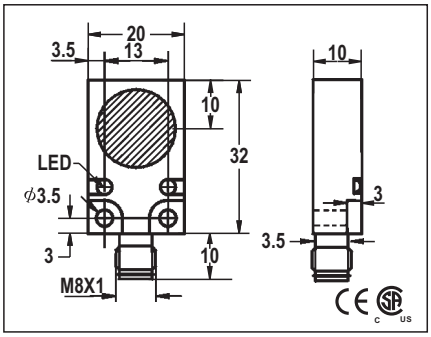

M 18			M 30			20X32X10	
10-30VDC or 5-36VDC or 10-55VDC			10-30VDC or 5-36VDC or 10-55VDC			10-30VDC or 5-36VDC or 10-55VDC	
<10%			<10%			<10%	
<10mA	<20mA		<10mA	<20mA		<10mA	<20mA
200mA			200mA			200mA	
<0.01mA			<0.01mA			<0.01mA	
-			-			-	
-			-			-	
<1.5V or <1.0V or <2.0V			<1.5V or <1.0V or <2.0V			<1.5V or <1.0V or <2.0V	
1KHZ	500HZ		300HZ	150HZ		1KHZ	
0.2ms/0.2ms	0.5ms/0.5ms		0.5ms/0.5ms	1ms/1ms		0.2ms/0.2ms	
<15%(Sr)			<15%(Sr)			<15%(Sr)	
<1.0%(Sr)			<1.0%(Sr)			<1.0%(Sr)	
IP67			IP67			IP67	
-25 °C - +70 °C			-25 °C - +70 °C			-25 °C - +70 °C	
<10%(Sr)			<10%(Sr)			<10%(Sr)	
YES			YES			YES	
220mA			220mA			220mA	
<10ms			<10ms			<10ms	
RFI>3V/m / EFT>1KV / ESD>4KV (contact)			RFI>3V/m / EFT>1KV / ESD>4KV (contact)			RFI>3V/m / EFT>1KV / ESD>4KV (contact)	
IEC 60947-5-2,Part 7.4.1 / IEC 60947-5-2,Part 7.4.2			IEC 60947-5-2,Part 7.4.1 / IEC 60947-5-2,Part 7.4.2			IEC 60947-5-2,Part 7.4.1 / IEC 60947-5-2,Part 7.4.2	
PBT			PBT			PBT	
FCM1-1805N-ARS4	29	FCM2-1808N-ARS4	FCM1-3010N-ARS4	29	FCM2-3015N-ARS4	FQM1-2005N-ACU3	25
FCM1-1805N-BRS4	30	FCM2-1808N-BRS4	FCM1-3010N-BRS4	30	FCM2-3015N-BRS4	FQM1-2005N-BCU3	25
FCM1-1805P-ARS4	31	FCM2-1808P-ARS4	FCM1-3010P-ARS4	31	FCM2-3015P-ARS4	FQM1-2005P-ACU3	26
FCM1-1805P-BRS4	32	FCM2-1808P-BRS4	FCM1-3010P-BRS4	32	FCM2-3015P-BRS4	FQM1-2005P-BCU3	26
FCM1-1805P-SRS4	34	FCM2-1808P-SRS4	FCM1-3010P-SRS4	34	FCM2-3015P-SRS4	FQM1-2005P-SCU4	28
FCM1-1805N-SRS4	33	FCM2-1808N-SRS4	FCM1-3010N-SRS4	33	FCM2-3015N-SRS4	FQM1-2005N-SCU4	27
FCM1-1805C-ARS4	36	FCM2-1808C-ARS4	FCM1-3010C-ARS4	36	FCM2-3015C-ARS4	FQM1-2005C-ACU3	35
FCM1-1805C-BRS4	74	FCM2-1808C-BRS4	FCM1-3010C-BRS4	74	FCM2-3015C-BRS4	FQM1-2005C-BCU3	73
HCM1-1805N-ARS4	29	HCM2-1808N-ARS4	HCM1-3010N-ARS4	29	HCM2-3015N-ARS4	HQM1-2005N-ACU3	25
HCM1-1805N-BRS4	30	HCM2-1808N-BRS4	HCM1-3010N-BRS4	30	HCM2-3015N-BRS4	HQM1-2005N-BCU3	25
HCM1-1805P-ARS4	31	HCM2-1808P-ARS4	HCM1-3010P-ARS4	31	HCM2-3015P-ARS4	HQM1-2005P-ACU3	26
HCM1-1805P-BRS4	32	HCM2-1808P-BRS4	HCM1-3010P-BRS4	32	HCM2-3015P-BRS4	HQM1-2005P-BCU3	26
ICM1-1805N-ARS4	29	ICM2-1808N-ARS4	ICM1-3010N-ARS4	29	ICM2-3015N-ARS4	IQM1-2005N-ACU3	25
ICM1-1805N-BRS4	30	ICM2-1808N-BRS4	ICM1-3010N-BRS4	30	ICM2-3015N-BRS4	IQM1-2005N-BCU3	25
ICM1-1805P-ARS4	31	ICM2-1808P-ARS4	ICM1-3010P-ARS4	31	ICM2-3015P-ARS4	IQM1-2005P-ACU3	26
ICM1-1805P-BRS4	32	ICM2-1808P-BRS4	ICM1-3010P-BRS4	32	ICM2-3015P-BRS4	IQM1-2005P-BCU3	26
ICM1-1805P-SRS4	34	ICM2-1808P-SRS4	ICM1-3010P-SRS4	34	ICM2-3015P-SRS4	IQM1-2005P-SCU4	28
ICM1-1805N-SRS4	33	ICM2-1808N-SRS4	ICM1-3010N-SRS4	33	ICM2-3015N-SRS4	IQM1-2005N-SCU4	27

1. DC 2 wire type see page 17.
2. voltage drop:<1.5V(10-30V),<1V(5-36V), <2V(10-55V).
3. 10-55V type: no load current < 20mA.

M 18	M 30		20X32X10
Approx.50 g	Approx.111 g	Approx.121 g	Approx.55 g

DC INDUCTIVE PLASTIC HOUSING CONNECTOR TYPE

M 12	
●	○
2 mm	4 mm
PBT RESIN	
●	

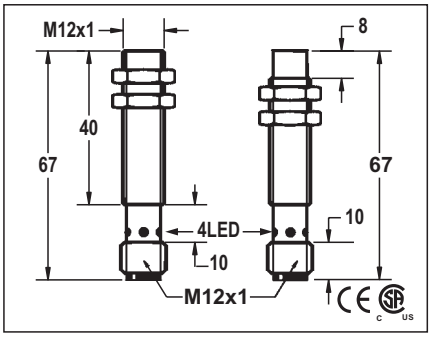

10-30VDC or 5-36VDC or 10-55VDC	
<10%	
<10mA	<20mA
200mA	
<0.01mA	
-	
-	
<1.5V or <1.0V or <2.0V	
2KHZ	1KHZ
0.1ms/0.1ms	0.2ms/0.2ms
<15%(Sr)	
<1.0%(Sr)	
IP67	
-25 °C - +70 °C	
<10%(Sr)	
YES	
220mA	
<10ms	
RFI>3V/m / EFT>1KV / ESD>4KV (contact)	
IEC 60947-5-2,Part 7.4.1 / IEC 60947-5-2,Part 7.4.2	
POM	PBT

FCP1-1202N-ARU4	29	FCP2-1204N-ARU4
FCP1-1202N-BRU4	30	FCP2-1204N-BRU4
FCP1-1202P-ARU4	31	FCP2-1204P-ARU4
FCP1-1202P-BRU4	32	FCP2-1204P-BRU4
FCP1-1202P-SRU4	34	FCP2-1204P-SRU4
FCP1-1202N-SRU4	33	FCP2-1204N-SRU4
FCP1-1202C-ARU4	36	FCP2-1204C-ARU4
FCP1-1202C-BRU4	74	FCP2-1204C-BRU4
HCP1-1202N-ARU4	29	HCP2-1204N-ARU4
HCP1-1202N-BRU4	30	HCP2-1204N-BRU4
HCP1-1202P-ARU4	31	HCP2-1204P-ARU4
HCP1-1202P-BRU4	32	HCP2-1204P-BRU4
ICP1-1202N-ARU4	29	ICP2-1204N-ARU4
ICP1-1202N-BRU4	30	ICP2-1204N-BRU4
ICP1-1202P-ARU4	31	ICP2-1204P-ARU4
ICP1-1202P-BRU4	32	ICP2-1204P-BRU4
ICP1-1202P-SRU4	34	ICP2-1204P-SRU4
ICP1-1202N-SRU4	33	ICP2-1204N-SRU4

1. DC 2 wire type see page 17.
2. voltage drop:<1.5V(10-30V),<1V(5-36V), <2V(10-55V).
3. 10-55V type: no load current < 20mA.

Approx.14 g

M 12	
●	○
2 mm	4 mm
PBT RESIN	
●	

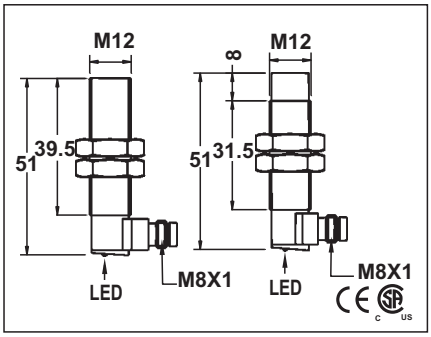

10-30VDC or 5-36VDC or 10-55VDC	
<10%	
<10mA	<20mA
200mA	
<0.01mA	
-	
-	
<1.5V or <1.0V or <2.0V	
2KHZ	1KHZ
0.1ms/0.1ms	0.2ms/0.2ms
<15%(Sr)	
<1.0%(Sr)	
IP67	
-25 °C - +70 °C	
<10%(Sr)	
YES	
220mA	
<10ms	
RFI>3V/m / EFT>1KV / ESD>4KV (contact)	
IEC 60947-5-2,Part 7.4.1 / IEC 60947-5-2,Part 7.4.2	
POM	PBT

FCP1-1202N-ACU3Y	29	FCP2-1204N-ACU3Y
FCP1-1202N-BCU3Y	30	FCP2-1204N-BCU3Y
FCP1-1202P-ACU3Y	31	FCP2-1204P-ACU3Y
FCP1-1202P-BCU3Y	32	FCP2-1204P-BCU3Y
FCP1-1202P-SCU4Y	34	FCP2-1204P-SCU4Y
FCP1-1202N-SCU4Y	33	FCP2-1204N-SCU4Y
FCP1-1202C-ACU3Y	36	FCP2-1204C-ACU3Y
FCP1-1202C-BCU3Y	74	FCP2-1204C-BCU3Y
HCP1-1202N-ACU3Y	29	HCP2-1204N-ACU3Y
HCP1-1202N-BCU3Y	30	HCP2-1204N-BCU3Y
HCP1-1202P-ACU3Y	31	HCP2-1204P-ACU3Y
HCP1-1202P-BCU3Y	32	HCP2-1204P-BCU3Y
ICP1-1202N-ACU3Y	29	ICP2-1204N-ACU3Y
ICP1-1202N-BCU3Y	30	ICP2-1204N-BCU3Y
ICP1-1202P-ACU3Y	31	ICP2-1204P-ACU3Y
ICP1-1202P-BCU3Y	32	ICP2-1204P-BCU3Y
ICP1-1202P-SCU4Y	34	ICP2-1204P-SCU4Y
ICP1-1202N-SCU4Y	33	ICP2-1204N-SCU4Y

Approx.14 g

M 12	
●	○
2 mm	4 mm
PBT RESIN	
●	

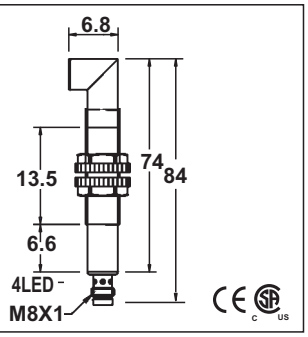

10-30VDC or 5-36VDC or 10-55VDC	
<10%	
<10mA	<20mA
200mA	
<0.01mA	
-	
-	
<1.5V or <1.0V or <2.0V	
2KHZ	1KHZ
0.1ms/0.1ms	0.2ms/0.2ms
<15%(Sr)	
<1.0%(Sr)	
IP67	
-25 °C - +70 °C	
<10%(Sr)	
YES	
220mA	
<10ms	
RFI>3V/m / EFT>1KV / ESD>4KV (contact)	
IEC 60947-5-2,Part 7.4.1 / IEC 60947-5-2,Part 7.4.2	
POM	

FCP1-1202N-ACU3Z	29	FCP2-1204N-ACU3Z
FCP1-1202N-BCU3Z	30	FCP2-1204N-BCU3Z
FCP1-1202P-ACU3Z	31	FCP2-1204P-ACU3Z
FCP1-1202P-BCU3Z	32	FCP2-1204P-BCU3Z
FCP1-1202P-SCU4Z	34	FCP2-1204P-SCU4Z
FCP1-1202N-SCU4Z	33	FCP2-1204N-SCU4Z
FCP1-1202C-ACU3Z	36	FCP2-1204C-ACU3Z
FCP1-1202C-BCU3Z	74	FCP2-1204C-BCU3Z
HCP1-1202N-ACU3Z	29	HCP2-1204N-ACU3Z
HCP1-1202N-BCU3Z	30	HCP2-1204N-BCU3Z
HCP1-1202P-ACU3Z	31	HCP2-1204P-ACU3Z
HCP1-1202P-BCU3Z	32	HCP2-1204P-BCU3Z
ICP1-1202N-ACU3Z	29	ICP2-1204N-ACU3Z
ICP1-1202N-BCU3Z	30	ICP2-1204N-BCU3Z
ICP1-1202P-ACU3Z	31	ICP2-1204P-ACU3Z
ICP1-1202P-BCU3Z	32	ICP2-1204P-BCU3Z
ICP1-1202P-SCU4Z	34	ICP2-1204P-SCU4Z
ICP1-1202N-SCU4Z	33	ICP2-1204N-SCU4Z

Approx.14 g

DC INDUCTIVE PLASTIC HOUSING CONNECTOR TYPE

M 18	
●	○
5 mm	8 mm
PBT RESIN	
●	

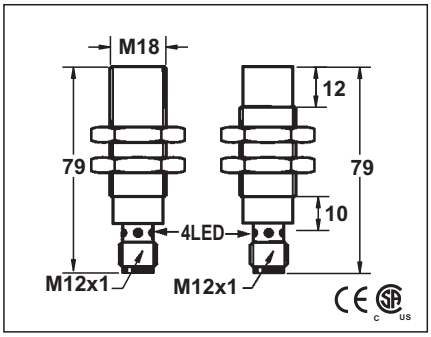

10-30VDC or 5-36VDC or 10-55VDC	
<10%	
<10mA	<20mA
200mA	
<0.01mA	
-	
-	
<1.5V or <1.0V or <2.0V	
1KHZ	500HZ
0.2ms/0.2ms	0.5ms/0.5ms
<15%	
<1.0%(Sr)	
IP67	
-25°C - +70°C	
<10%(Sr)	
YES	
220mA	
<10ms	
RFI>3V/m / EFT>1KV / ESD>4KV (contact)	
IEC 60947-5-2,Part 7.4.1 / IEC 60947-5-2,Part 7.4.2	
PBT	

FCP1-1805N-ARU4	29	FCP2-1808N-ARU4
FCP1-1805N-BRU4	30	FCP2-1808N-BRU4
FCP1-1805P-ARU4	31	FCP2-1808P-ARU4
FCP1-1805P-BRU4	32	FCP2-1808P-BRU4
FCP1-1805P-SRU4	34	FCP2-1808P-SRU4
FCP1-1805N-SRU4	33	FCP2-1808N-SRU4
FCP1-1805C-ARU4	36	FCP2-1808C-ARU4
FCP1-1805C-BRU4	74	FCP2-1808C-BRU4
HCP1-1805N-ARU4	29	HCP2-1808N-ARU4
HCP1-1805N-BRU4	30	HCP2-1808N-BRU4
HCP1-1805P-ARU4	31	HCP2-1808P-ARU4
HCP1-1805P-BRU4	32	HCP2-1808P-BRU4
ICP1-1805N-ARU4	29	ICP2-1808N-ARU4
ICP1-1805N-BRU4	30	ICP2-1808N-BRU4
ICP1-1805P-ARU4	31	ICP2-1808P-ARU4
ICP1-1805P-BRU4	32	ICP2-1808P-BRU4
ICP1-1805P-SRU4	34	ICP2-1808P-SRU4
ICP1-1805N-SRU4	33	ICP2-1808N-SRU4

1. DC 2 wire type see page 17.
2. voltage drop:<1.5V(10-30V),<1V(5-36V), <2V(10-55V).
3. 10-55V type: no load current < 20mA.

Approx.35 g

M 18	
●	○
5 mm	8 mm
PBT RESIN	
●	

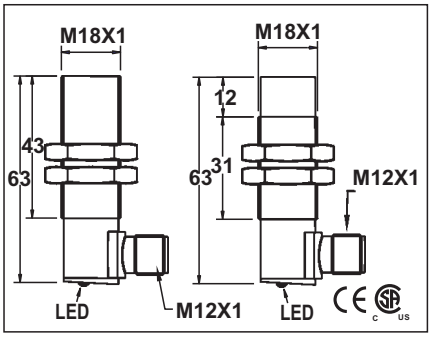

10-30VDC or 5-36VDC or 10-55VDC	
<10%	
<10mA	<20mA
200mA	
<0.01mA	
-	
-	
<1.5V or <1.0V or <2.0V	
1KHZ	500HZ
0.2ms/0.2ms	0.5ms/0.5ms
<15%	
<1.0%(Sr)	
IP67	
-25°C - +70°C	
<10%(Sr)	
YES	
220mA	
<10ms	
RFI>3V/m / EFT>1KV / ESD>4KV (contact)	
IEC 60947-5-2,Part 7.4.1 / IEC 60947-5-2,Part 7.4.2	
PBT	

FCP1-1805N-ARU4Y	29	FCP2-1808N-ARU4Y
FCP1-1805N-BRU4Y	30	FCP2-1808N-BRU4Y
FCP1-1805P-ARU4Y	31	FCP2-1808P-ARU4Y
FCP1-1805P-BRU4Y	32	FCP2-1808P-BRU4Y
FCP1-1805P-SRU4Y	34	FCP2-1808P-SRU4Y
FCP1-1805N-SRU4Y	33	FCP2-1808N-SRU4Y
FCP1-1805C-ARU4Y	36	FCP2-1808C-ARU4Y
FCP1-1805C-BRU4Y	74	FCP2-1808C-BRU4Y
HCP1-1805N-ARU4Y	29	HCP2-1808N-ARU4Y
HCP1-1805N-BRU4Y	30	HCP2-1808N-BRU4Y
HCP1-1805P-ARU4Y	31	HCP2-1808P-ARU4Y
HCP1-1805P-BRU4Y	32	HCP2-1808P-BRU4Y
ICP1-1805N-ARU4Y	29	ICP2-1808N-ARU4Y
ICP1-1805N-BRU4Y	30	ICP2-1808N-BRU4Y
ICP1-1805P-ARU4Y	31	ICP2-1808P-ARU4Y
ICP1-1805P-BRU4Y	32	ICP2-1808P-BRU4Y
ICP1-1805P-SRU4Y	34	ICP2-1808P-SRU4Y
ICP1-1805N-SRU4Y	33	ICP2-1808N-SRU4Y

Approx.35 g

M 18	
●	○
5 mm	8 mm
PBT RESIN	
●	

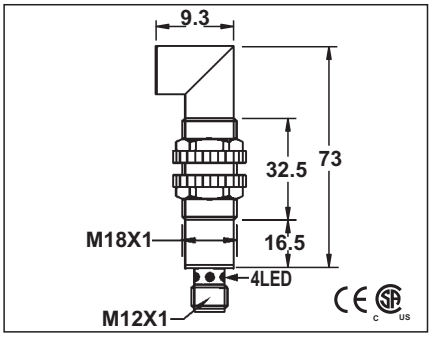

10-30VDC or 5-36VDC or 10-55VDC	
<10%	
<10mA	<20mA
200mA	
<0.01mA	
-	
-	
<1.5V or <1.0V or <2.0V	
1KHZ	500HZ
0.2ms/0.2ms	0.5ms/0.5ms
<15%	
<1.0%(Sr)	
IP67	
-25°C - +70°C	
<10%(Sr)	
YES	
220mA	
<10ms	
RFI>3V/m / EFT>1KV / ESD>4KV (contact)	
IEC 60947-5-2,Part 7.4.1 / IEC 60947-5-2,Part 7.4.2	
PBT	

FCP1-1805N-ARU4Z	29	FCP2-1808N-ARU4Z
FCP1-1805N-BRU4Z	30	FCP2-1808N-BRU4Z
FCP1-1805P-ARU4Z	31	FCP2-1808P-ARU4Z
FCP1-1805P-BRU4Z	32	FCP2-1808P-BRU4Z
FCP1-1805P-SRU4Z	34	FCP2-1808P-SRU4Z
FCP1-1805N-SRU4Z	33	FCP2-1808N-SRU4Z
FCP1-1805C-ARU4Z	36	FCP2-1808C-ARU4Z
FCP1-1805C-BRU4Z	74	FCP2-1808C-BRU4Z
HCP1-1805N-ARU4Z	29	HCP2-1808N-ARU4Z
HCP1-1805N-BRU4Z	30	HCP2-1808N-BRU4Z
HCP1-1805P-ARU4Z	31	HCP2-1808P-ARU4Z
HCP1-1805P-BRU4Z	32	HCP2-1808P-BRU4Z
ICP1-1805N-ARU4Z	29	ICP2-1808N-ARU4Z
ICP1-1805N-BRU4Z	30	ICP2-1808N-BRU4Z
ICP1-1805P-ARU4Z	31	ICP2-1808P-ARU4Z
ICP1-1805P-BRU4Z	32	ICP2-1808P-BRU4Z
ICP1-1805P-SRU4Z	34	ICP2-1808P-SRU4Z
ICP1-1805N-SRU4Z	33	ICP2-1808N-SRU4Z

Approx.35 g

DC INDUCTIVE PLASTIC HOUSING CONNECTOR TYPE

M 30	
●	○
10 mm	15 mm
PBT RESIN	
●	

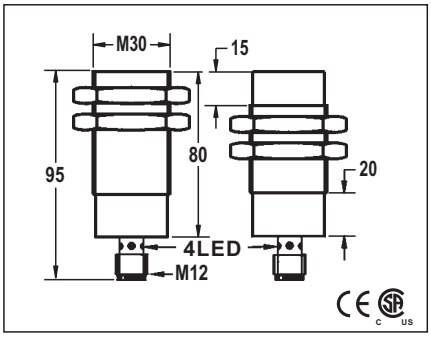

M 30	
●	○
10 mm	15 mm
PBT RESIN	
●	

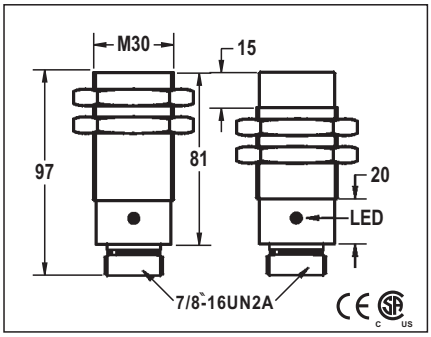

ϕ34	
●	○
15 mm	20 mm
PBT RESIN	
●	

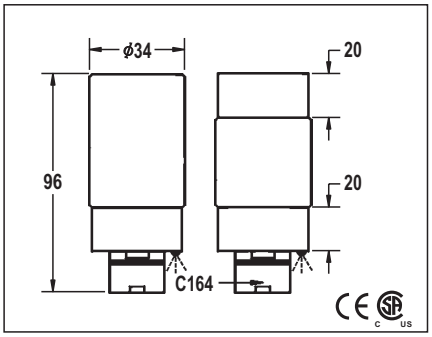

10-30VDC or 5-36VDC or 10-55VDC		
<10%		
<10mA	<20mA	
200mA		
<0.01mA		
-		
-		
<1.5V or <1.0V or <2.0V		
300HZ	150HZ	
0.5ms/0.5ms	1ms/1ms	
<15%(Sr)		
<1.0%(Sr)		
IP67		
-25 °C - +70 °C		
<10%(Sr)		
YES		
220mA		
<10ms		
RFI>3V/m / EFT>1KV / ESD>4KV (contact)		
IEC 60947-5-2,Part 7.4.1 / IEC 60947-5-2,Part 7.4.2		
PBT		
FCP1-3010N-ARU4	29	FCP2-3015N-ARU4
FCP1-3010N-BRU4	30	FCP2-3015N-BRU4
FCP1-3010P-ARU4	31	FCP2-3015P-ARU4
FCP1-3010P-BRU4	32	FCP2-3015P-BRU4
FCP1-3010P-SRU4	34	FCP2-3015P-SRU4
FCP1-3010N-SRU4	33	FCP2-3015N-SRU4
FCP1-3010C-ARU4	36	FCP2-3015C-ARU4
FCP1-3010C-BRU4	74	FCP2-3015C-BRU4
HCP1-3010N-ARU4	29	HCP2-3015N-ARU4
HCP1-3010N-BRU4	30	HCP2-3015N-BRU4
HCP1-3010P-ARU4	31	HCP2-3015P-ARU4
HCP1-3010P-BRU4	32	HCP2-3015P-BRU4
ICP1-3010N-ARU4	29	ICP2-3015N-ARU4
ICP1-3010N-BRU4	30	ICP2-3015N-BRU4
ICP1-3010P-ARU4	31	ICP2-3015P-ARU4
ICP1-3010P-BRU4	32	ICP2-3015P-BRU4
ICP1-3010P-SRU4	34	ICP2-3015P-SRU4
ICP1-3010N-SRU4	33	ICP2-3015N-SRU4

1. DC 2 wire type see page 17.
2. voltage drop:<1.5V(10-30V),<1V(5-36V), <2V(10-55V).
3. 10-55V type: no load current < 20mA.

Approx.120 g

10-30VDC or 5-36VDC or 10-55VDC		
<10%		
<10mA	<20mA	
200mA		
<0.01mA		
-		
-		
<1.5V or <1.0V or <2.0V		
300HZ	150HZ	
0.5ms/0.5ms	1ms/1ms	
<15%(Sr)		
<1.0%(Sr)		
IP67		
-25 °C - +70 °C		
<10%(Sr)		
YES		
220mA		
<10ms		
RFI>3V/m / EFT>1KV / ESD>4KV (contact)		
IEC 60947-5-2,Part 7.4.1 / IEC 60947-5-2,Part 7.4.2		
PBT		
FCP1-3010N-AZU4	37	FCP2-3015N-AZU4
FCP1-3010N-BZU4	38	FCP2-3015N-BZU4
FCP1-3010P-AZU4	39	FCP2-3015P-AZU4
FCP1-3010P-BZU4	40	FCP2-3015P-BZU4
FCP1-3010P-SZU4	42	FCP2-3015P-SZU4
FCP1-3010N-SZU4	41	FCP2-3015N-SZU4
FCP1-3010C-AZU4	43	FCP2-3015C-AZU4
FCP1-3010C-BZU4	75	FCP2-3015C-BZU4
HCP1-3010N-AZU4	37	HCP2-3015N-AZU4
HCP1-3010N-BZU4	38	HCP2-3015N-BZU4
HCP1-3010P-AZU4	39	HCP2-3015P-AZU4
HCP1-3010P-BZU4	40	HCP2-3015P-BZU4
ICP1-3010N-AZU4	37	ICP2-3015N-AZU4
ICP1-3010N-BZU4	38	ICP2-3015N-BZU4
ICP1-3010P-AZU4	39	ICP2-3015P-AZU4
ICP1-3010P-BZU4	40	ICP2-3015P-BZU4
ICP1-3010P-SZU4	42	ICP2-3015P-SZU4
ICP1-3010N-SZU4	41	ICP2-3015N-SZU4

Approx.120 g

10-30VDC or 5-36VDC or 10-55VDC		
<10%		
<10mA	<20mA	
200mA		
<0.01mA		
-		
-		
<1.5V or <1.0V or <2.0V		
300HZ	150HZ	
0.5ms/0.5ms	1ms/1ms	
<15%(Sr)		
<1.0%(Sr)		
IP67		
-25 °C - +70 °C		
<10%(Sr)		
YES		
220mA		
<10ms		
RFI>3V/m / EFT>1KV / ESD>4KV (contact)		
IEC 60947-5-2,Part 7.4.1 / IEC 60947-5-2,Part 7.4.2		
PBT		
FCP1-D3415N-AYU5	45	FCP2-D3420N-AYU5
FCP1-D3415N-BYU5	46	FCP2-D3420N-BYU5
FCP1-D3415P-AYU5	47	FCP2-D3420P-AYU5
FCP1-D3415P-BYU5	48	FCP2-D3420P-BYU5
FCP1-D3415P-SYU5	50	FCP2-D3420P-SYU5
FCP1-D3415N-SYU5	49	FCP2-D3420N-SYU5
FCP1-D3415C-AYU5	44	FCP2-D3420C-AYU5
FCP1-D3415C-BYU5	76	FCP2-D3420C-BYU5
HCP1-D3415N-AYU5	45	HCP2-D3420N-AYU5
HCP1-D3415N-BYU5	46	HCP2-D3420N-BYU5
HCP1-D3415P-AYU5	47	HCP2-D3420P-AYU5
HCP1-D3415P-BYU5	48	HCP2-D3420P-BYU5
ICP1-D3415N-AYU5	45	ICP2-D3420N-AYU5
ICP1-D3415N-BYU5	46	ICP2-D3420N-BYU5
ICP1-D3415P-AYU5	47	ICP2-D3420P-AYU5
ICP1-D3415P-BYU5	48	ICP2-D3420P-BYU5
ICP1-D3415P-SYU5	50	ICP2-D3420P-SYU5
ICP1-D3415N-SYU5	49	ICP2-D3420N-SYU5

Approx.162 g