PART P-01 ~ P-22

Ribg Wide

● Shielded ○ non-Shielded
Switching Distance Sn mm
Housing Material
● With LED ○ Without LED

Dimensions (unit: mm)

Operating Voltage &Ripple
Min. Time Between Targets
No Load Current
Max. Load Current
Leakge Current
Surge Current
Min. Load Current
Voltage Drop
Switching Frequency
Pulse Duration
Switching Hysteresis
Repeat Accuracy
Protection Category
Operating Temperature
Temperature Drift
Min. Target
Reverse Polarity Protection
Short Circuit Protection
Overload Trip Point
EMC
Shock / Vibration

DC 3 wire 10-30V NPN N.O.
DC 3 wire 10-30V NPN N.C.
DC 3 wire 10-30V PNP N.O.
DC 3 wire 10-30V PNP N.C.
DC 4 wire 10-30V Changeover PNP (N.O. & N.C.)
DC 4 wire 10-30V Changeover NPN (N.O. & N.C.)
DC 2 wire 10-60V N.O.
DC 2 wire 10-60V N.C.
DC 3 wire 10-55v NPN N.O.
DC 3 wire 10-55v NPN N.C.
DC 3 wire 10-55v PNP N.O.
DC 3 wire 10-55v PNP N.C.
AC 2 wire 20-250V N.O.
AC 2 wire 20-250V N.C.
AC/DC 2 wire 20-250V N.O.
AC/DC 2 wire 20-250V N.C.
NAMUR

Remark

Cable 2M (PVC)
Weight

Please put each catalog page in the blank. The specification on the left will help your reading.

RING TYPE INDUCTIVE PROXIMITY SENSORS

■ Principle of operation

Since the electromagnetic field of this type sensors is concentrated within the inside diameter of the ring,the sensor is activated when a moving metallic object through the ring.Suitable applications are flow rate and ejection measument.

■ Applications fot one-shot type

This picture is the typical application of the ring sensor with one-shot.This type sensor can output a 100ms fixed pulse-width independent of the time the target is present.

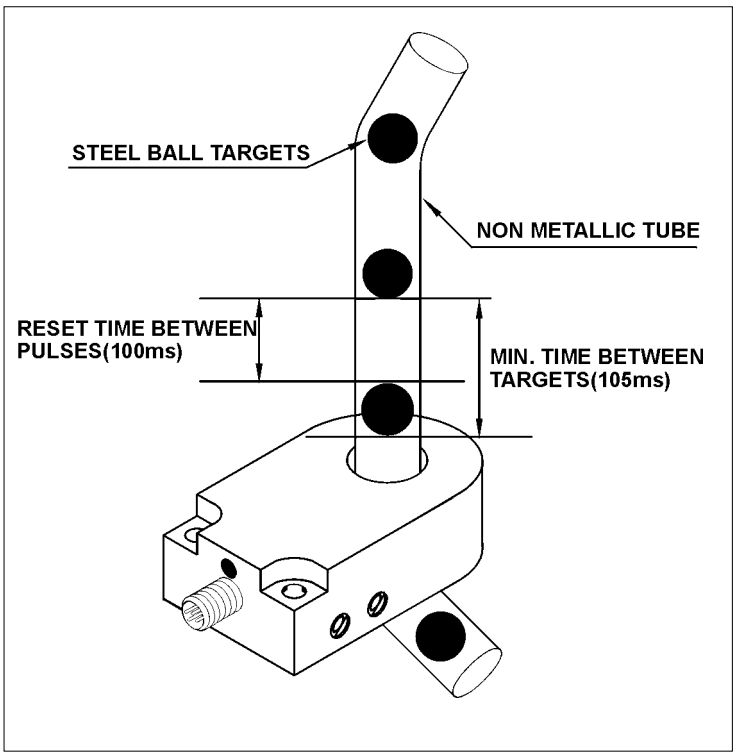

■ Mounting considerations

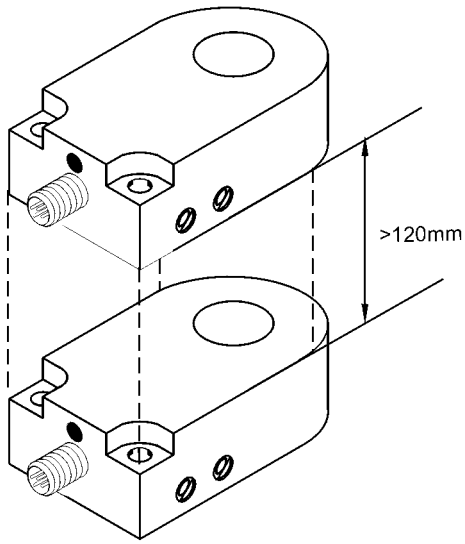

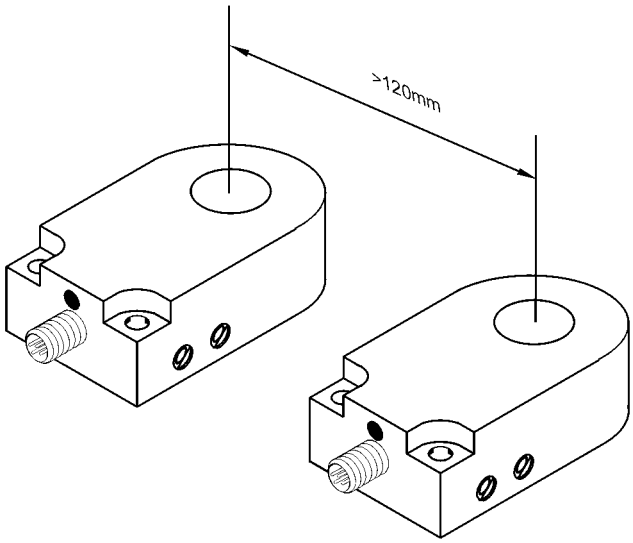

DC RING TYPE INDUCTIVE PROXIMITY SENSORS

10mm	10mm	10mm
○	○	○
-	-	-
PBT	PBT	PBT
○	●	●
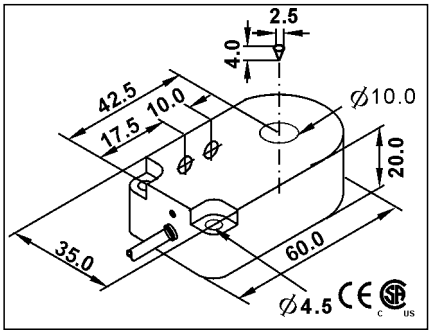	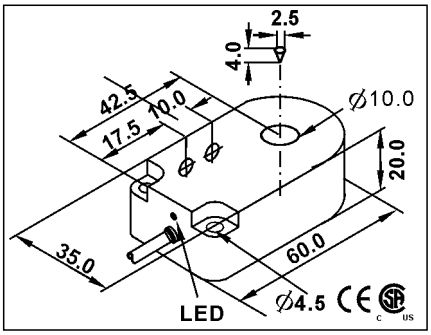	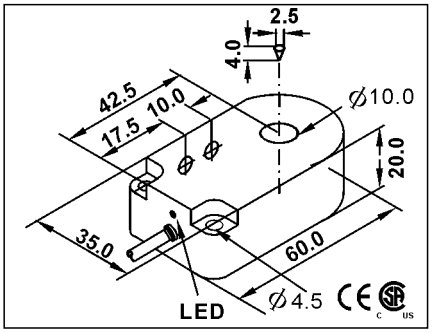
6~12VDC (Ripple≤10%)	10~60VDC (Ripple≤10%)	10~30VDC (Ripple≤10%)
-	-	-
≥2.2mA(off);≤0.1mA(on)	≤1.8mA	≤15mA
-	100mA	≤200mA
-	≤1.8mA	≤10uA
-	-	-
-	3mA	-
-	<6V at 100mA	≤1.5V at 200mA
2kHZ	2kHZ	2kHZ
-	-	-
15%	15%	15%
≤2% of Rated Operating Distance	≤2% of Rated Operating Distance	≤2% of Rated Operating Distance
IP67	IP67	IP67
-25°C to 70°C	-25°C to 70°C	-25°C to 70°C
-	±10%(sr)	±10%(sr)
D=2.5mm;L=4mm	D=2.5mm;L=4mm	D=2.5mm;L=4mm
-	Yes	Yes
-	Yes	Yes
-	120~150mA	220~280mA
RFI>3V/m / EFT>1KV / ESD>4KV (contact)	RFI>3V/m / EFT>1KV / ESD>4KV (contact)	RFI>3V/m / EFT>1KV / ESD>4KV (contact)
IEC 60947-5-2,Part 7.4.1 / IEC 60947-5-2,Part 7.4.2	IEC 60947-5-2,Part 7.4.1 / IEC 60947-5-2,Part 7.4.2	IEC 60947-5-2,Part 7.4.1 / IEC 60947-5-2,Part 7.4.2
		RRP2-R1020N-A3U2 1
		RRP2-R1020N-B3U2 2
		RRP2-R1020P-A3U2 3
		RRP2-R1020P-B3U2 4
		RRP2-R1020P-S4U2 6
		RRP2-R1020N-S4U2 5
	RRP2-R1020C-A2U2 7	
	RRP2-R1020C-B2U2 8	
RRP2-R1020NU 21		
Wiring diagram number see page 11-18. The following page is the same.		
4∅ 2X0.34	4∅ 2X0.34	4∅
approx.97g	approx.97g	approx.97g

DC RING TYPE INDUCTIVE PROXIMITY SENSORS

15mm	15mm	15mm
○	○	○
-	-	-
PBT	PBT	PBT
○	●	●
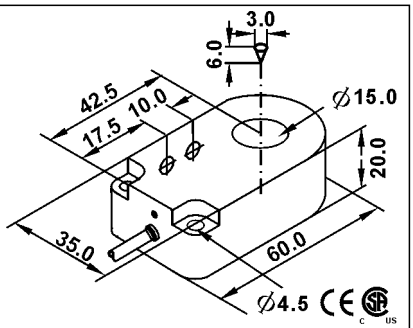	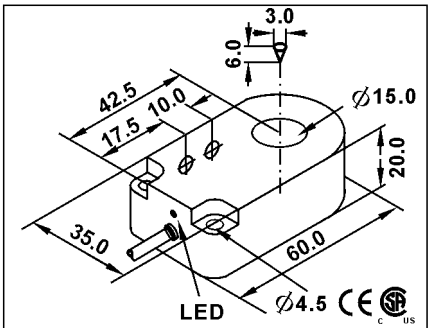	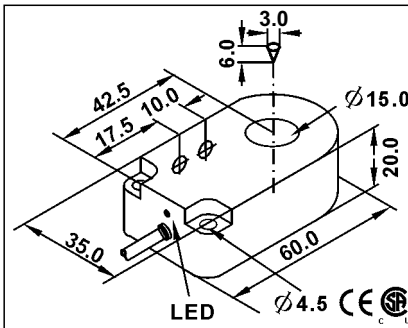
6~12VDC (Ripple≤10%)	10~60VDC (Ripple≤10%)	10~30VDC (Ripple≤10%)
-	-	-
≥2.2mA(off);≤0.1mA(on)	≤1.8mA	≤15mA
-	100mA	≤200mA
-	≤1.8mA	≤10uA
-	-	-
-	3mA	-
-	<6V at 100mA	≤1.5V at 200mA
1.5kHZ	1.5kHZ	1.5kHZ
-	-	-
15%	15%	15%
≤2% of Rated Operating Distance	≤2% of Rated Operating Distance	≤2% of Rated Operating Distance
IP67	IP67	IP67
-25°C to 70°C	-25°C to 70°C	-25°C to 70°C
-	±10%(sr)	±10%(sr)
D=3mm;L=6mm	D=3mm;L=6mm	D=3mm;L=6mm
-	Yes	Yes
-	Yes	Yes
-	120~150mA	220~280mA
RFI>3V/m / EFT>1KV / ESD>4KV (contact)	RFI>3V/m / EFT>1KV / ESD>4KV (contact)	RFI>3V/m / EFT>1KV / ESD>4KV (contact)
IEC 60947-5-2,Part 7.4.1 / IEC 60947-5-2,Part 7.4.2	IEC 60947-5-2,Part 7.4.1 / IEC 60947-5-2,Part 7.4.2	IEC 60947-5-2,Part 7.4.1 / IEC 60947-5-2,Part 7.4.2
		RRP2-R1520N-A3U2 1
		RRP2-R1520N-B3U2 2
		RRP2-R1520P-A3U2 3
		RRP2-R1520P-B3U2 4
		RRP2-R1520P-S4U2 6
		RRP2-R1520N-S4U2 5
	RRP2-R1520C-A2U2 7	
	RRP2-R1520C-B2U2 8	
RRP2-R1520NU 21		
4∅ 2X0.5	4∅ 2X0.5	4∅
approx.95g	approx.95g	approx.95g

DC RING TYPE INDUCTIVE PROXIMITY SENSORS

21mm	21mm	21mm
○	○	○
-	-	-
PBT	PBT	PBT
○	●	●
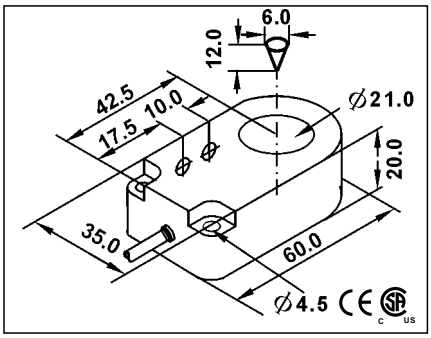	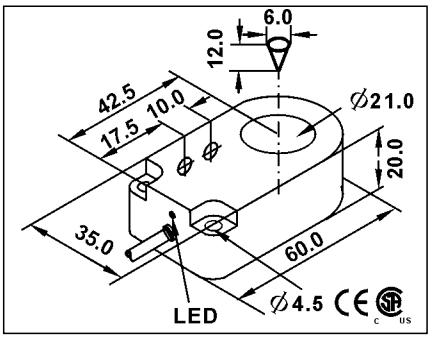	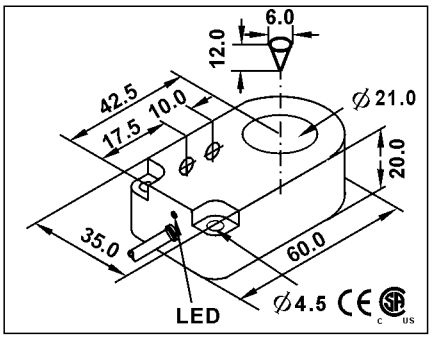
6~12VDC (Ripple≤10%)	10~60VDC (Ripple≤10%)	10~30VDC (Ripple≤10%)
-	-	-
≥2.2mA(off);≤0.1mA(on)	≤1.8mA	≤15mA
-	100mA	≤200mA
-	≤1.2mA	≤10uA
-	-	-
-	3mA	-
-	<6V at 100mA	≤1.5V at 200mA
1kHZ	1kHZ	1kHZ
-	-	-
15%	15%	15%
≤2% of Rated Operating Distance	≤2% of Rated Operating Distance	≤2% of Rated Operating Distance
IP67	IP67	IP67
-25°C to 70°C	-25°C to 70°C	-25°C to 70°C
-	±10%(sr)	±10%(sr)
D=6mm;L=12mm	D=6mm;L=12mm	D=6mm;L=12mm
-	Yes	Yes
-	Yes	Yes
-	120~150mA	220~280mA
RFI>3V/m / EFT>1KV / ESD>4KV (contact)	RFI>3V/m / EFT>1KV / ESD>4KV (contact)	RFI>3V/m / EFT>1KV / ESD>4KV (contact)
IEC 60947-5-2,Part 7.4.1 / IEC 60947-5-2,Part 7.4.2	IEC 60947-5-2,Part 7.4.1 / IEC 60947-5-2,Part 7.4.2	IEC 60947-5-2,Part 7.4.1 / IEC 60947-5-2,Part 7.4.2
		RRP2-R2120N-A3U2 1
		RRP2-R2120N-B3U2 2
		RRP2-R2120P-A3U2 3
		RRP2-R2120P-B3U2 4
		RRP2-R2120P-S4U2 6
		RRP2-R2120N-S4U2 5
	RRP2-R2120C-A2U2 7	
	RRP2-R2120C-B2U2 8	
RRP2-R2120NU 21		
4∅ 2X0.34	4∅ 2X0.34	4∅
approx.91g	approx.91g	approx.91g

DC RING TYPE INDUCTIVE PROXIMITY SENSORS

43mm	43mm	43mm
○	○	○
-	-	-
PBT	PBT	PBT
○	●	●
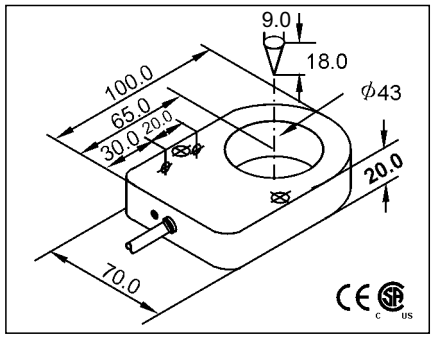	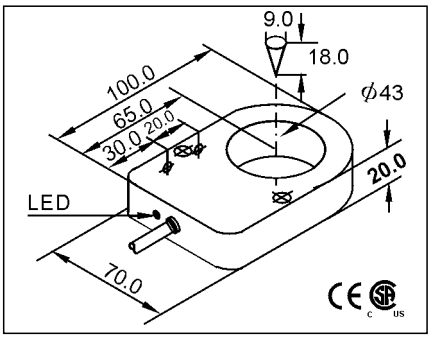	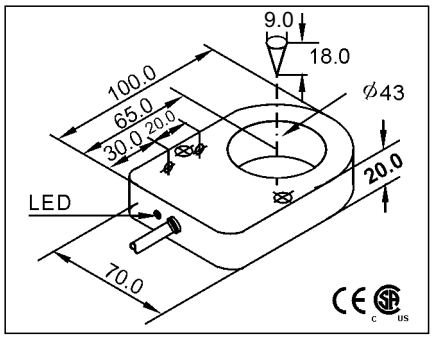
6~12VDC (Ripple≤10%)	10~60VDC (Ripple≤10%)	10~30VDC (Ripple≤10%)
-	-	-
≥2.2mA(off);≤0.1mA(on)	≤1.8mA	≤15mA
-	100mA	≤200mA
-	≤1.2mA	≤10uA
-	-	-
-	3mA	-
-	<6V at 100mA	≤1.5V at 200mA
500HZ	500HZ	500HZ
-	-	-
	15%	15%
≤2% of Rated Operating Distance	≤2% of Rated Operating Distance	≤2% of Rated Operating Distance
IP67	IP67	IP67
-25°C to 70°C	-25°C to 70°C	-25°C to 70°C
-	±10%(sr)	±10%(sr)
D=9mm;L=18mm	D=9mm;L=18mm	D=9mm;L=18mm
-	Yes	Yes
-	Yes	Yes
-	120~150mA	220~280mA
RFI>3V/m / EFT>1KV / ESD>4KV (contact)	RFI>3V/m / EFT>1KV / ESD>4KV (contact)	RFI>3V/m / EFT>1KV / ESD>4KV (contact)
IEC 60947-5-2,Part 7.4.1 / IEC 60947-5-2,Part 7.4.2	IEC 60947-5-2,Part 7.4.1 / IEC 60947-5-2,Part 7.4.2	IEC 60947-5-2,Part 7.4.1 / IEC 60947-5-2,Part 7.4.2
		RRP2-R4320N-A3U2 1
		RRP2-R4320N-B3U2 2
		RRP2-R4320P-A3U2 3
		RRP2-R4320P-B3U2 4
		RRP2-R4320P-S4U2 6
		RRP2-R4320N-S4U2 5
	RRP2-R4320C-A2U2 7	
	RRP2-R4320C-B2U2 8	
RRP2-R4320NU 21		
5.8∅ 2X0.5	5.8∅ 2X0.5	5.8∅
approx.216g	approx.216g	approx.216g

DC RING TYPE INDUCTIVE PROXIMITY SENSORS WITH CONNECTOR

10mm	10mm	15mm
○	○	○
-	-	-
PBT	PBT	PBT
●	●	●
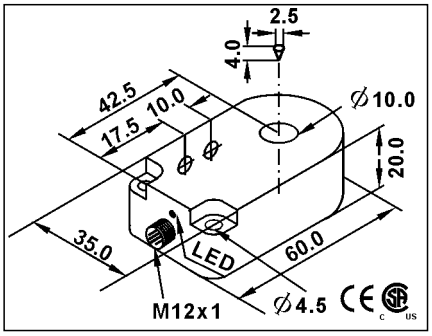	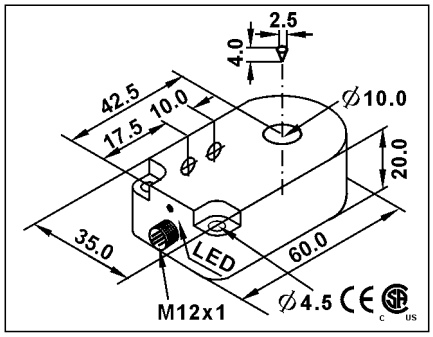	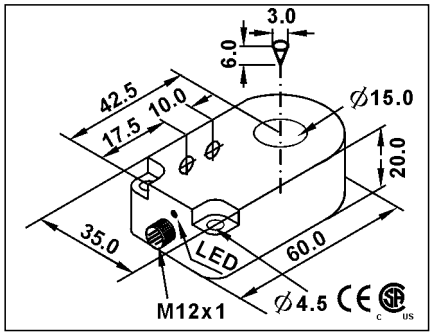
10~60VDC (Ripple≤10%)	10~30VDC (Ripple≤10%)	10~60VDC (Ripple≤10%)
-	-	-
≤1.8mA	≤15mA	≤1.8mA
100mA	≤200mA	100mA
≤1.8mA	≤10uA	≤1.8mA
-	-	-
3mA	-	3mA
<6V at 100mA	≤1.5V at 200mA	<6V at 100mA
2kHZ	2kHZ	1.5kHZ
-	-	-
15%	15%	15%
≤2% of Rated Operating Distance	≤2% of Rated Operating Distance	≤2% of Rated Operating Distance
IP67	IP67	IP67
-25°C to 70°C	-25°C to 70°C	-25°C to 70°C
±10%(sr)	±10%(sr)	±10%(sr)
D=2.5mm;L=4mm	D=2.5mm;L=4mm	D=3mm;L=6mm
Yes	Yes	Yes
Yes	Yes	Yes
120~150mA	220~280mA	120~150mA
RFI>3V/m / EFT>1KV / ESD>4KV (contact)	RFI>3V/m / EFT>1KV / ESD>4KV (contact)	RFI>3V/m / EFT>1KV / ESD>4KV (contact)
IEC 60947-5-2,Part 7.4.1 / IEC 60947-5-2,Part 7.4.2	IEC 60947-5-2,Part 7.4.1 / IEC 60947-5-2,Part 7.4.2	IEC 60947-5-2,Part 7.4.1 / IEC 60947-5-2,Part 7.4.2
	RRP2-R1020N-ARU4 29	
	RRP2-R1020N-BRU4 30	
	RRP2-R1020P-ARU4 31	
	RRP2-R1020P-BRU4 32	
	RRP2-R1020P-SRU4 34	
	RRP2-R1020N-SRU4 33	
RRP2-R1020C-ARU4 36		RRP2-R1520C-ARU4 36
RRP2-R1020C-BRU4 74		RRP2-R1520C-BRU4 74
approx.50g	approx.50g	approx.48g

DC RING TYPE INDUCTIVE PROXIMITY SENSORS WITH CONNECTOR

15mm	21mm	21mm
○	○	○
-	-	-
PBT	PBT	PBT
●	●	●
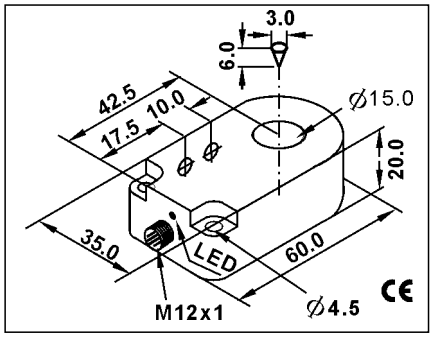	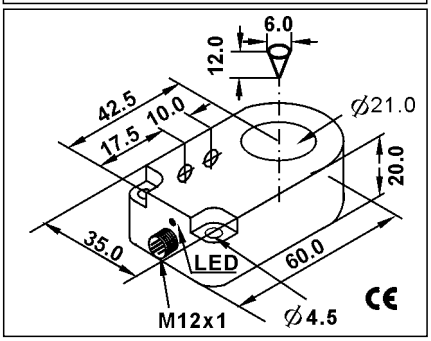	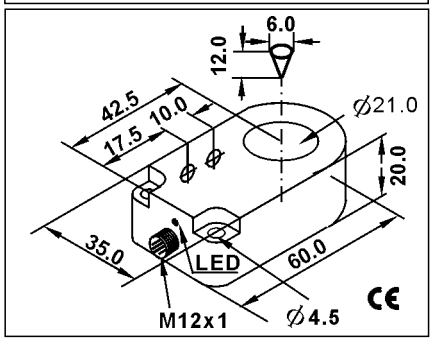
10~30VDC (Ripple≤10%)	10~60VDC (Ripple≤10%)	10~30VDC (Ripple≤10%)
-	-	-
≤15mA	≤1.8mA	≤15mA
≤200mA	100mA	≤200mA
≤10uA	≤1.2mA	≤10uA
-	-	-
-	3mA	-
≤1.5V at 200mA	<6V at 100mA	≤1.5V at 200mA
1.5kHZ	1kHZ	1kHZ
-	-	-
15%	15%	15%
≤2% of Rated Operating Distance	≤2% of Rated Operating Distance	≤2% of Rated Operating Distance
IP67	IP67	IP67
-25°C to 70°C	-25°C to 70°C	-25°C to 70°C
±10%(sr)	±10%(sr)	±10%(sr)
D=3mm;L=6mm	D=6mm;L=12mm	D=6mm;L=12mm
Yes	Yes	Yes
Yes	Yes	Yes
220~280mA	120~150mA	220~280mA
RFI>3V/m / EFT>1KV / ESD>4KV (contact)	RFI>3V/m / EFT>1KV / ESD>4KV (contact)	RFI>3V/m / EFT>1KV / ESD>4KV (contact)
IEC 60947-5-2,Part 7.4.1 / IEC 60947-5-2,Part 7.4.2	IEC 60947-5-2,Part 7.4.1 / IEC 60947-5-2,Part 7.4.2	IEC 60947-5-2,Part 7.4.1 / IEC 60947-5-2,Part 7.4.2

RRP2-R1520N-ARU4	29			RRP2-R2120N-ARU4	29
RRP2-R1520N-BRU4	30			RRP2-R2120N-BRU4	30
RRP2-R1520P-ARU4	31			RRP2-R2120P-ARU4	31
RRP2-R1520P-BRU4	32			RRP2-R2120P-BRU4	32
RRP2-R1520P-SRU4	34			RRP2-R2120P-SRU4	34
RRP2-R1520N-SRU4	33			RRP2-R2120N-SRU4	33
		RRP2-R2120C-ARU4	36		
		RRP2-R2120C-BRU4	74		

approx.48g	approx.50g	approx.50g

DC RING TYPE INDUCTIVE PROXIMITY SENSORS WITH CONNECTOR

43mm	43mm	
○	○	
-	-	
PBT	PBT	
●	●	

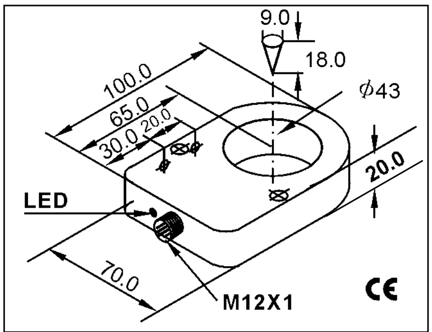

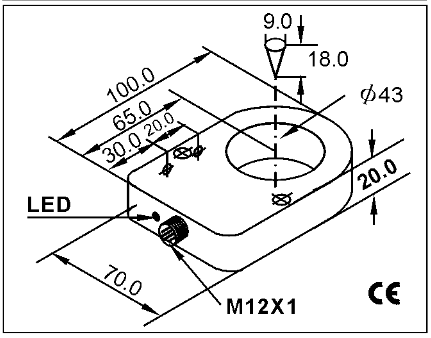

10~60VDC (Ripple≤10%)	10~30VDC (Ripple≤10%)	
-	-	
≤1.8mA	≤15mA	
100mA	≤200mA	
≤1.2mA	≤10uA	
-	-	
3mA	-	
<6V at 100mA	≤1.5V at 200mA	
500HZ	500HZ	
-	-	
15%	15%	
≤2% of Rated Operating Distance	≤2% of Rated Operating Distance	
IP67	IP67	
-25℃ to 70℃	-25℃ to 70℃	
±10%(sr)	±10%(sr)	
D=9mm;L=18mm	D=9mm;L=18mm	
Yes	Yes	
Yes	Yes	
120~150mA	220~280mA	
RFI>3V/m / EFT>1KV / ESD>4KV (contact)	RFI>3V/m / EFT>1KV / ESD>4KV (contact)	
IEC 60947-5-2,Part 7.4.1 / IEC 60947-5-2,Part 7.4.2	IEC 60947-5-2,Part 7.4.1 / IEC 60947-5-2,Part 7.4.2	

		RRP2-R4320N-ARU4	29		
		RRP2-R4320N-BRU4	30		
		RRP2-R4320P-ARU4	31		
		RRP2-R4320P-BRU4	32		
		RRP2-R4320P-SRU4	34		
		RRP2-R4320N-SRU4	33		
RRP2-R4320C-ARU4	36				
RRP2-R4320C-BRU4	74				

approx.134g	approx.134g	approx.59g

AC RING TYPE INDUCTIVE PROXIMITY SENSORS

10mm	15mm	21mm
○	○	○
-	-	-
PBT	PBT	PBT
●	●	●
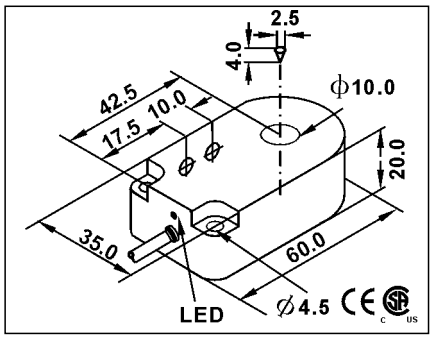	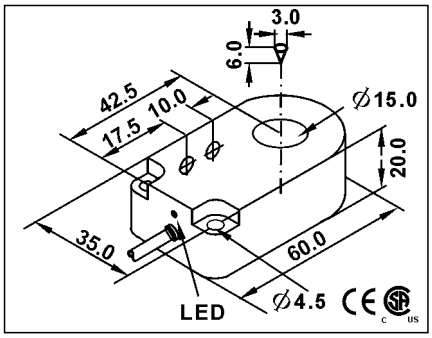	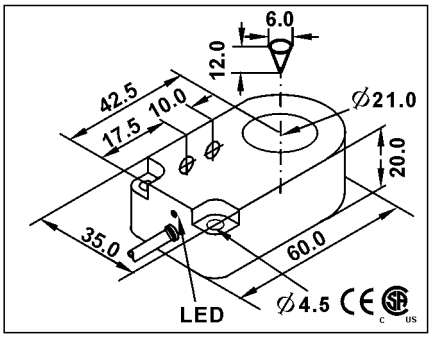
20~250VAC	20~250VAC	20~250VAC
-	-	-
<1.8mA	<1.8mA	<1.8mA
≤400mA	≤400mA	≤400mA
<1.8mA	<1.8mA	<1.8mA
5A(20ms)	5A(20ms)	5A(20ms)
5mA	5mA	5mA
<8V AC at 400mA	<8V AC at 400mA	<8V AC at 400mA
8HZ	8HZ	8HZ
-	-	-
-	-	-
<1.0% (Sr)	<1.0% (Sr)	<1.0% (Sr)
IP67	IP67	IP67
-25°C to 70°C	-25°C to 70°C	-25°C to 70°C
<10%(sr)	<10%(sr)	<10%(sr)
D=2.5mm;L=4mm	D=3mm;L=6mm	D=6mm;L=12mm
-	-	-
-	-	-
-	-	-
RFI>3V/m / EFT>1KV / ESD>4KV (contact)	RFI>3V/m / EFT>1KV / ESD>4KV (contact)	RFI>3V/m / EFT>1KV / ESD>4KV (contact)
IEC 60947-5-2,Part 7.4.1 / IEC 60947-5-2,Part 7.4.2	IEC 60947-5-2,Part 7.4.1 / IEC 60947-5-2,Part 7.4.2	IEC 60947-5-2,Part 7.4.1 / IEC 60947-5-2,Part 7.4.2
RRP2-R1020A-A2L2 9	RRP2-R1520A-A2L2 9	RRP2-R2120A-A2L2 9
RRP2-R1020A-B2L2 10	RRP2-R1520A-B2L2 10	RRP2-R2120A-B2L2 10
Wiring diagram number see page 11-18. The following page is the same.		
4∅2X0.34	5.8∅2X0.5	5.8∅2X0.5
approx.97g	approx.95g	approx.91g

AC RING TYPE INDUCTIVE PROXIMITY SENSORS

43mm
○
-
PBT
●

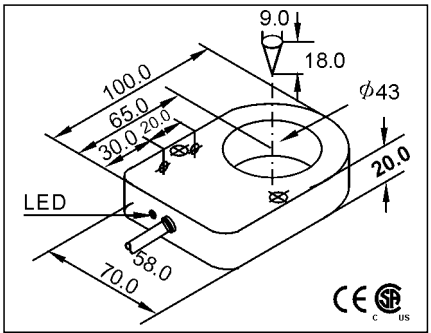

20~250VAC
-
<1.8mA
≤400mA
<1.8mA
5A(20ms)
5mA
<8V AC at 400mA
8HZ
-
-
<1.0% (Sr)
IP67
-25°C to 70°C
<10%(sr)
D=9mm;L=18mm
-
-
-
RFI>3V/m / EFT>1KV / ESD>4KV (contact)
IEC 60947-5-2,Part 7.4.1 / IEC 60947-5-2,Part 7.4.2

RRP2-R4320A-A2L2	9
RRP2-R4320A-B2L2	10

5.8∅ 2X0.5
approx.216g

AC RING TYPE INDUCTIVE PROXIMITY SENSORS WITH CONNECTOR

10mm	15mm	21mm
○	○	○
-	-	-
PBT	PBT	PBT
●	●	●
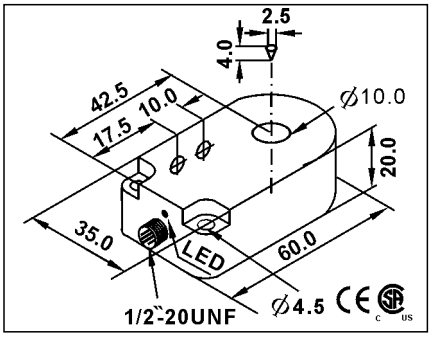	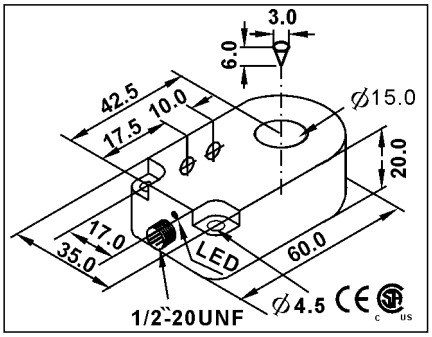	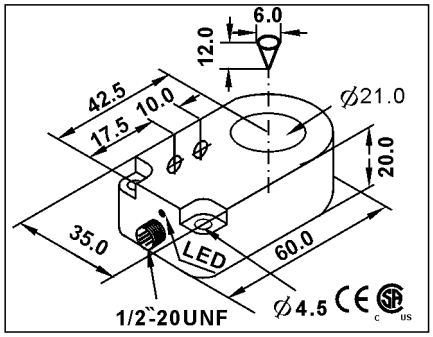
20~250VAC	20~250VAC	20~250VAC
-	-	-
<1.8mA	<1.8mA	<1.8mA
≤400mA	≤400mA	≤400mA
<1.8mA	<1.8mA	<1.8mA
5A(20ms)	5A(20ms)	5A(20ms)
5mA	5mA	5mA
<8V AC at 400mA	<8V AC at 400mA	<8V AC at 400mA
8HZ	8HZ	8HZ
-	-	-
-	-	-
<1.0% (Sr)	<1.0% (Sr)	<1.0% (Sr)
IP67	IP67	IP67
-25℃ to 70℃	-25℃ to 70℃	-25℃ to 70℃
<10%(sr)	<10%(sr)	<10%(sr)
D=2.5mm;L=4mm	D=3mm;L=6mm	D=6mm;L=12mm
-	-	-
-	-	-
-	-	-
RFI>3V/m / EFT>1KV / ESD>4KV (contact)	RFI>3V/m / EFT>1KV / ESD>4KV (contact)	RFI>3V/m / EFT>1KV / ESD>4KV (contact)
IEC 60947-5-2,Part 7.4.1 / IEC 60947-5-2,Part 7.4.2	IEC 60947-5-2,Part 7.4.1 / IEC 60947-5-2,Part 7.4.2	IEC 60947-5-2,Part 7.4.1 / IEC 60947-5-2,Part 7.4.2
RRP2-R1020A-AUL3 54	RRP2-R1520A-AUL3 54	RRP2-R2120A-AUL3 54
RRP2-R1020A-BUL3 54	RRP2-R1520A-BUL3 54	RRP2-R2120A-BUL3 54
approx.50g	approx.48g	approx.44g

AC RING TYPE INDUCTIVE PROXIMITY SENSORS WITH CONNECTOR

43mm
○
-
PBT
●

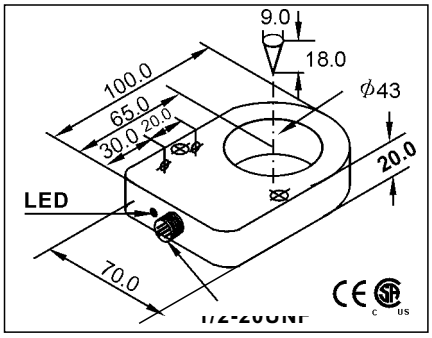

20~250VAC
-
<1.8mA
≤400mA
<1.8mA
5A(20ms)
5mA
<8V AC at 400mA
8HZ
-
-
<1.0% (Sr)
IP67
-25°C to 70°C
<10%(sr)
D=9mm;L=18mm
-
-
-
RFI>3V/m / EFT>1KV / ESD>4KV (contact)
IEC 60947-5-2,Part 7.4.1 / IEC 60947-5-2,Part 7.4.2

RRP2-R4320A-AUL3	54
RRP2-R4320A-BUL3	54

approx.216g

DC RING TYPE INDUCTIVE PROXIMITY SENSORS WITH ONE-SHOT

10mm	10mm	15mm
○	○	○
-	-	-
PBT	PBT	PBT
●	●	●
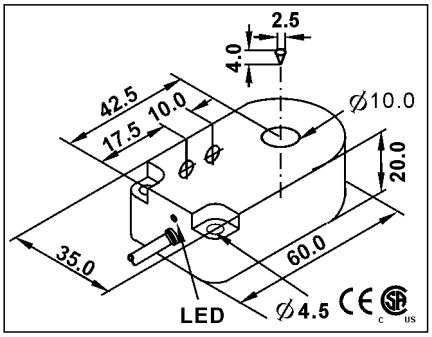	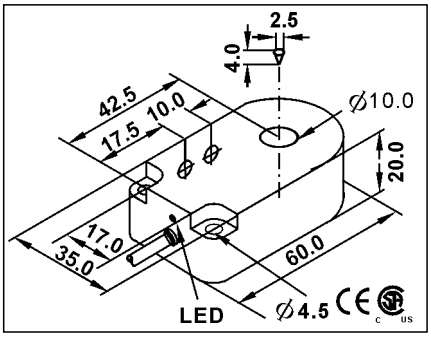	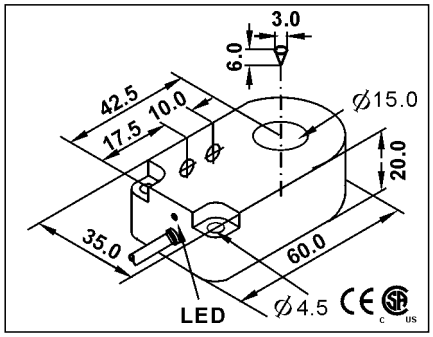
10~60VDC (Ripple≤10%)	10~30VDC (Ripple≤10%)	10~60VDC (Ripple≤10%)
105ms	105ms	105ms
≤1.8mA	≤15mA	≤1.8mA
100mA	≤200mA	100mA
≤1.8mA	≤10uA	≤1.8mA
-	-	-
3mA	-	3mA
<6V at 100mA	≤1.5V at 200mA	<6V at 100mA
8HZ	8HZ	8HZ
100ms	100ms	100ms
15%	15%	15%(Sr)
≤2% of Rated Operating Distance	≤2% of Rated Operating Distance	≤2% of Rated Operating Distance
IP67	IP67	IP67
-25℃ to 70℃	-25℃ to 70℃	-25℃ to 70℃
±10%(sr)	±10%(sr)	±10%
D=2.5mm;L=4mm	D=2.5mm;L=4mm	D=3mm;L=6mm
Yes	Yes	Yes
Yes	Yes	Yes
120~150mA	220~280mA	120~150mA
RFI>3V/m / EFT>1KV / ESD>4KV (contact)	RFI>3V/m / EFT>1KV / ESD>4KV (contact)	RFI>3V/m / EFT>1KV / ESD>4KV (contact)
IEC 60947-5-2,Part 7.4.1 / IEC 60947-5-2,Part 7.4.2	IEC 60947-5-2,Part 7.4.1 / IEC 60947-5-2,Part 7.4.2	IEC 60947-5-2,Part 7.4.1 / IEC 60947-5-2,Part 7.4.2
	RRP2-R1020N-A3U2/T 1	
	RRP2-R1020N-B3U2/T 2	
	RRP2-R1020P-A3U2/T 3	
	RRP2-R1020P-B3U2/T 4	
	RRP2-R1020P-S4U2/T 6	
	RRP2-R1020N-S4U2/T 5	
RRP2-R1020C-A2U2/T 7		RRP2-R1520C-A2U2/T 7
RRP2-R1020C-B2U2/T 8		RRP2-R1520C-B2U2/T 8
4∅ 2X0.34	4∅	4∅ 2X0.34
approx.97g	approx.97g	approx.92g

DC RING TYPE INDUCTIVE PROXIMITY SENSORS WITH ONE-SHOT

15mm	21mm	21mm
○	○	○
-	-	-
PBT	PBT	PBT
●	●	●
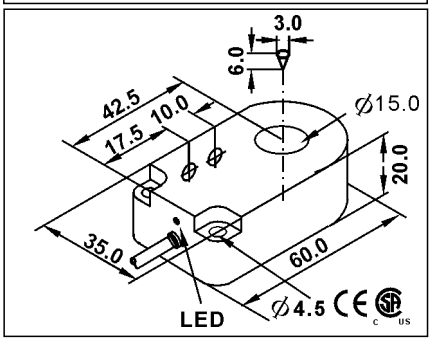	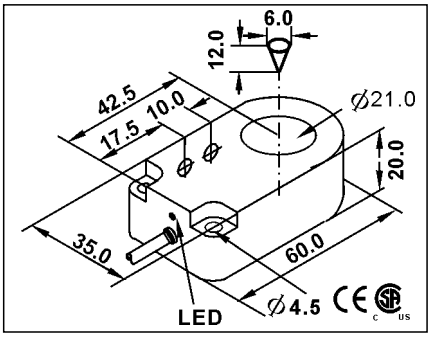	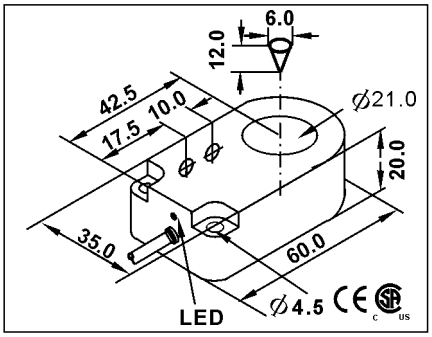
10~30VDC (Ripple≤10%)	10~60VDC (Ripple≤10%)	10~30VDC (Ripple≤10%)
105ms	105ms	105ms
≤15mA	≤1.8mA	≤15mA
≤200mA	100mA	≤200mA
≤10uA	≤1.2mA	≤10uA
-	-	-
-	3mA	-
≤1.5V at 200mA	<6V at 100mA	≤1.5V at 200mA
8HZ	8HZ	8HZ
100ms	100ms	100ms
15%(Sr)	15%(Sr)	15%(Sr)
≤2% of Rated Operating Distance	≤2% of Rated Operating Distance	≤2% of Rated Operating Distance
IP67	IP67	IP67
-25℃ to 70℃	-25℃ to 70℃	-25℃ to 70℃
-	±10%(Sr)	±10%(Sr)
D=3mm;L=6mm	D=6mm;L=12mm	D=6mm;L=12mm
Yes	Yes	Yes
Yes	Yes	Yes
220~280mA	120~150mA	220~280mA
RFI>3V/m / EFT>1KV / ESD>4KV (contact)	RFI>3V/m / EFT>1KV / ESD>4KV (contact)	RFI>3V/m / EFT>1KV / ESD>4KV (contact)
IEC 60947-5-2,Part 7.4.1 / IEC 60947-5-2,Part 7.4.2	IEC 60947-5-2,Part 7.4.1 / IEC 60947-5-2,Part 7.4.2	IEC 60947-5-2,Part 7.4.1 / IEC 60947-5-2,Part 7.4.2
RRP2-R1520N-A3U2/T 1		RRP2-R2120N-A3U2/T 1
RRP2-R1520N-B3U2/T 2		RRP2-R2120N-B3U2/T 2
RRP2-R1520P-A3U2/T 3		RRP2-R2120P-A3U2/T 3
RRP2-R1520P-B3U2/T 4		RRP2-R2120P-B3U2/T 4
RRP2-R1520P-S4U2/T 6		RRP2-R2120P-S4U2/T 6
RRP2-R1520N-S4U2/T 5		RRP2-R2120N-S4U2/T 5
	RRP2-R2120C-A2U2/T 7	
	RRP2-R2120C-B2U2/T 8	
4∅	4∅ 2X0.34	4∅
approx.92g	approx.91	approx.91

DC RING TYPE INDUCTIVE PROXIMITY SENSORS WITH ONE-SHOT

43mm	43mm	
○	○	
-	-	
PBT	PBT	
●	●	
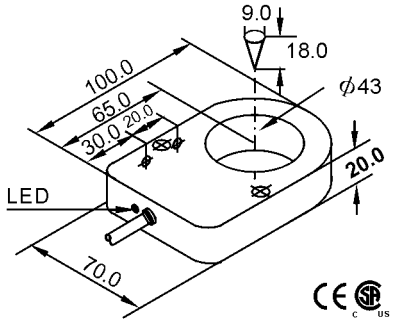	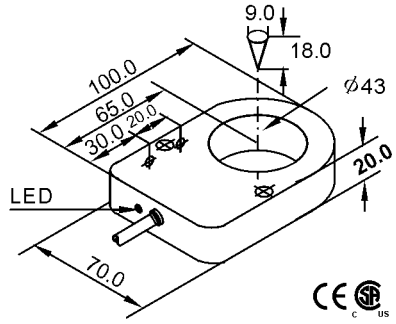	
10~60VDC (Ripple≤10%)	10~30VDC (Ripple≤10%)	
105ms	105ms	
≤1.8mA	≤15mA	
100mA	≤200mA	
≤1.2mA	≤10uA	
-	-	
3mA	-	
<6V at 100mA	≤1.5V at 200mA	
8HZ	8HZ	
100ms	100ms	
15%(Sr)	15%(Sr)	
≤2% of Rated Operating Distance	≤2% of Rated Operating Distance	
IP67	IP67	
-25℃ to 70℃	-25℃ to 70℃	
±10%(Sr)	±10%(Sr)	
D=9mm;L=18mm	D=9mm;L=18mm	
Yes	Yes	
Yes	Yes	
120~150mA	220~280mA	
RFI>3V/m / EFT>1KV / ESD>4KV (contact)	RFI>3V/m / EFT>1KV / ESD>4KV (contact)	
IEC 60947-5-2,Part 7.4.1 / IEC 60947-5-2,Part 7.4.2	IEC 60947-5-2,Part 7.4.1 / IEC 60947-5-2,Part 7.4.2	

		RRP2-R4320N-A3U2/T	1		
		RRP2-R4320N-B3U2/T	2		
		RRP2-R4320P-A3U2/T	3		
		RRP2-R4320P-B3U2/T	4		
		RRP2-R4320P-S4U2/T	6		
		RRP2-R4320N-S4U2/T	5		
RRP2-R4320C-A2U2/T	7				
RRP2-R4320C-B2U2/T	8				

5.8∅2X0.5	5.8∅	
approx.216g	approx.216g	

DC RING TYPE INDUCTIVE SENSORS WITH ONE-SHOT FOR CONNECTOR

10mm	10mm	15mm
○	○	○
-	-	-
PBT	PBT	PBT
●	●	●
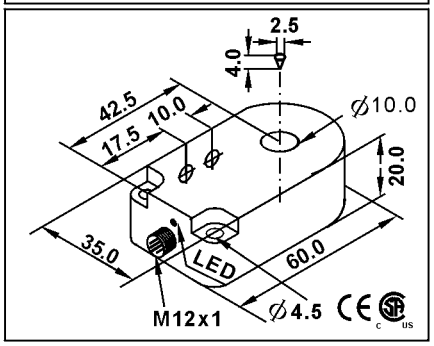	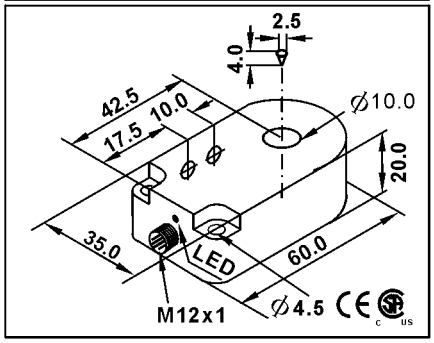	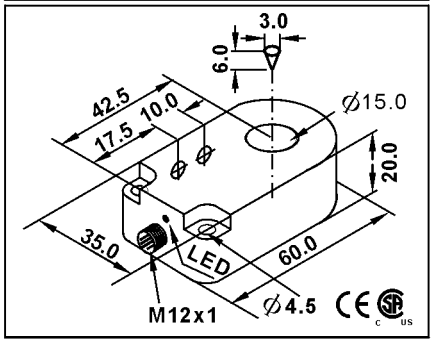
10~60VDC (Ripple≤10%)	10~30VDC (Ripple≤10%)	10~60VDC (Ripple≤10%)
105ms	105ms	105ms
≤1.8mA	≤15mA	≤1.8mA
100mA	≤200mA	100mA
≤1.8mA	≤10uA	≤1.8mA
-	-	-
3mA	-	3mA
<6V at 100mA	≤1.5V at 200mA	<6V at 100mA
8HZ	8HZ	8HZ
100ms	100ms	100ms
15%(Sr)	15%(Sr)	15%(Sr)
≤2% of Rated Operating Distance	≤2% of Rated Operating Distance	≤2% of Rated Operating Distance
IP67	IP67	IP67
-25°C to 70°C	-25°C to 70°C	-25°C to 70°C
±10% (Sr)	±10% (Sr)	±10% (Sr)
D=2.5mm;L=4mm	D=2.5mm;L=4mm	D=3mm;L=6mm
Yes	Yes	Yes
Yes	Yes	Yes
120~150mA	220~280mA	120~150mA
RFI>3V/m / EFT>1KV / ESD>4KV (contact)	RFI>3V/m / EFT>1KV / ESD>4KV (contact)	RFI>3V/m / EFT>1KV / ESD>4KV (contact)
IEC 60947-5-2,Part 7.4.1 / IEC 60947-5-2,Part 7.4.2	IEC 60947-5-2,Part 7.4.1 / IEC 60947-5-2,Part 7.4.2	IEC 60947-5-2,Part 7.4.1 / IEC 60947-5-2,Part 7.4.2
	RRP2-R1020N-ARU4/T 29	
	RRP2-R1020N-BRU4/T 30	
	RRP2-R1020P-ARU4/T 31	
	RRP2-R1020P-BRU4/T 32	
	RRP2-R1020P-SRU4/T 34	
	RRP2-R1020N-SRU4/T 33	
RRP2-R1020C-ARU4/T 36		RRP2-R1520C-ARU4/T 36
RRP2-R1020C-BRU4/T 74		RRP2-R1520C-BRU4/T 74
approx.50g	approx.50g	approx.48g

DC RING TYPE INDUCTIVE SENSORS WITH ONE-SHOT FOR CONNECTOR

15mm	21mm	21mm
○	○	○
-	-	-
PBT	PBT	PBT
●	●	●
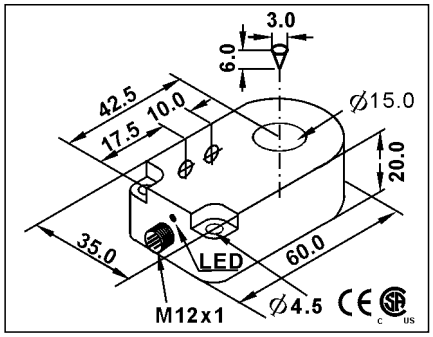	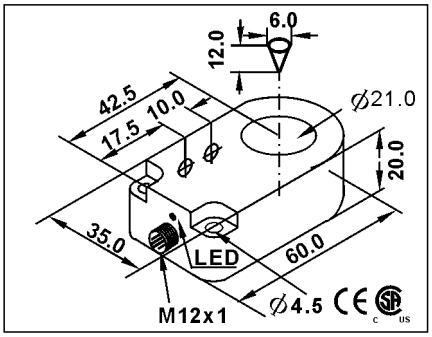	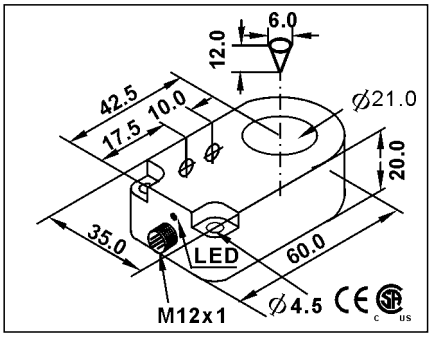
10~30VDC (Ripple≤10%)	10~60VDC (Ripple≤10%)	10~30VDC (Ripple≤10%)
105ms	105ms	105ms
≤15mA	≤1.8mA	≤15mA
≤200mA	100mA	≤200mA
≤10uA	≤1.2mA	≤10uA
-	-	-
-	3mA	-
≤1.5V at 200mA	<6V at 100mA	≤1.5V at 200mA
8HZ	8HZ	8HZ
100ms	100ms	100ms
15%(Sr)	15%(Sr)	15%(Sr)
≤2% of Rated Operating Distance	≤2% of Rated Operating Distance	≤2% of Rated Operating Distance
IP67	IP67	IP67
-25°C to 70°C	-25°C to 70°C	-25°C to 70°C
-	±10%(Sr)	±10%(Sr)
D=3mm;L=6mm	D=6mm;L=12mm	D=6mm;L=12mm
Yes	Yes	Yes
Yes	Yes	Yes
220~280mA	120~150mA	220~280mA
RFI>3V/m / EFT>1KV / ESD>4KV (contact)	RFI>3V/m / EFT>1KV / ESD>4KV (contact)	RFI>3V/m / EFT>1KV / ESD>4KV (contact)
IEC 60947-5-2,Part 7.4.1 / IEC 60947-5-2,Part 7.4.2	IEC 60947-5-2,Part 7.4.1 / IEC 60947-5-2,Part 7.4.2	IEC 60947-5-2,Part 7.4.1 / IEC 60947-5-2,Part 7.4.2
RRP2-R1520N-ARU4/T 29		RRP2-R2120N-ARU4/T 29
RRP2-R1520N-BRU4/T 30		RRP2-R2120N-BRU4/T 30
RRP2-R1520P-ARU4/T 31		RRP2-R2120P-ARU4/T 31
RRP2-R1520P-BRU4/T 32		RRP2-R2120P-BRU4/T 32
RRP2-R1520P-SRU4/T 41		RRP2-R2120P-SRU4/T 41
RRP2-R1520N-SRU4/T 42		RRP2-R2120N-SRU4/T 42
	RRP2-R2120C-ARU4/T 36	
	RRP2-R2120C-BRU4/T 74	
approx.44g	approx.44g	approx.44g

DC RING TYPE INDUCTIVE SENSORS WITH ONE-SHOT FOR CONNECTOR

43mm	43mm	
○	○	
-	-	
PBT	PBT	
●	●	
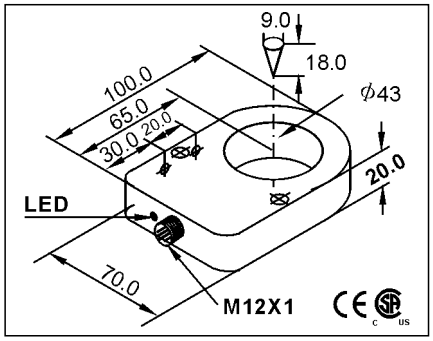	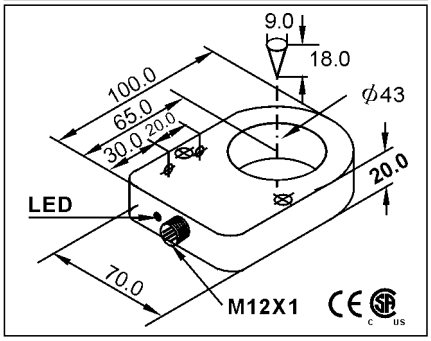	
10~60VDC (Ripple≤10%)	10~30VDC (Ripple≤10%)	
105ms	105ms	
≤1.8mA	≤15mA	
100mA	≤200mA	
≤1.2mA	≤10uA	
-	-	
3mA	-	
<6V at 100mA	≤1.5V at 200mA	
8HZ	8HZ	
100ms	100ms	
15%(Sr)	15%(Sr)	
≤2% of Rated Operating Distance	≤2% of Rated Operating Distance	
IP67	IP67	
-25°C to 70°C	-25°C to 70°C	
±10%(Sr)	±10%(Sr)	
D=9mm;L=18mm	D=9mm;L=18mm	
Yes	Yes	
Yes	Yes	
120~150mA	220~280mA	
RFI>3V/m / EFT>1KV / ESD>4KV (contact)	RFI>3V/m / EFT>1KV / ESD>4KV (contact)	
IEC 60947-5-2,Part 7.4.1 / IEC 60947-5-2,Part 7.4.2	IEC 60947-5-2,Part 7.4.1 / IEC 60947-5-2,Part 7.4.2	

		RRP2-R4320N-ARU4/T	29		
		RRP2-R4320N-BRU4/T	30		
		RRP2-R4320P-ARU4/T	31		
		RRP2-R4320P-BRU4/T	32		
		RRP2-R4320P-SRU4/T	34		
		RRP2-R4320N-SRU4/T	33		
RRP2-R4320C-ARU4/T	36				
RRP2-R4320C-BRU4/T	74				

approx.134g	approx.134g	

AC RING TYPE INDUCTIVE PROXIMITY SENSORS WITH ONE-SHOT

10mm	15mm	21mm
○	○	○
-	-	-
PBT	PBT	PBT
●	●	●
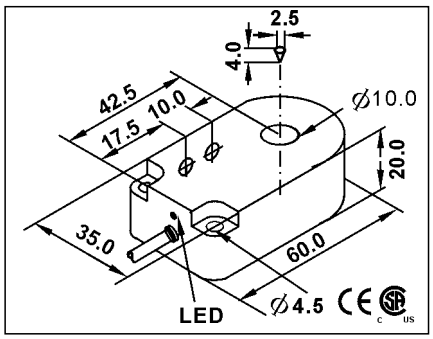	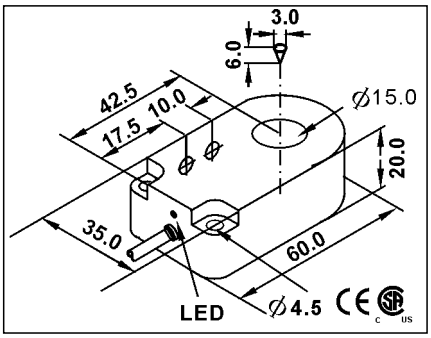	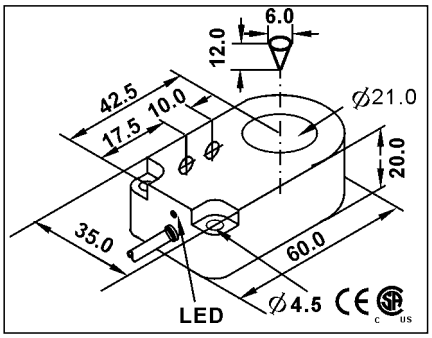
20~250VAC	20~250VAC	20~250VAC
105ms	105ms	105ms
<1.8mA	<1.8mA	<1.8mA
≤400mA	≤400mA	≤400mA
<1.8mA	<1.8mA	<1.8mA
5A(20ms)	5A(20ms)	5A(20ms)
5mA	5mA	5mA
<8V AC at 400mA	<8V AC at 400mA	<8V AC at 400mA
8HZ	8HZ	8HZ
100mS	100mS	100mS
<15 % (Sr)	<15 % (Sr)	<15 % (Sr)
<1.0% (Sr)	<1.0% (Sr)	<1.0% (Sr)
IP67	IP67	IP67
-25°C to 70°C	-25°C to 70°C	-25°C to 70°C
<10%(sr)	<10%(sr)	<10%(sr)
D=2.5mm;L=4mm	D=3mm;L=6mm	D=6mm;L=12mm
-	-	-
-	-	-
-	-	-
RFI>3V/m / EFT>1KV / ESD>4KV (contact)	RFI>3V/m / EFT>1KV / ESD>4KV (contact)	RFI>3V/m / EFT>1KV / ESD>4KV (contact)
IEC 60947-5-2,Part 7.4.1 / IEC 60947-5-2,Part 7.4.2	IEC 60947-5-2,Part 7.4.1 / IEC 60947-5-2,Part 7.4.2	IEC 60947-5-2,Part 7.4.1 / IEC 60947-5-2,Part 7.4.2
RRP2-R1020A-A2L2/T 9	RRP2-R1520A-A2L2/T 9	RRP2-R2120A-A2L2/T 9
RRP2-R1020A-B2L2/T 10	RRP2-R1520A-B2L2/T 10	RRP2-R2120A-B2L2/T 10
Wiring diagram number see page 11-18. The following page is the same.		
4∅ 2X0.34	4∅ 2X0.34	4∅ 2X0.34
approx.97g	approx.95g	approx.91g

AC RING TYPE INDUCTIVE PROXIMITY SENSORS WITH ONE-SHOT

43mm		
○		
-		
PBT		
●		
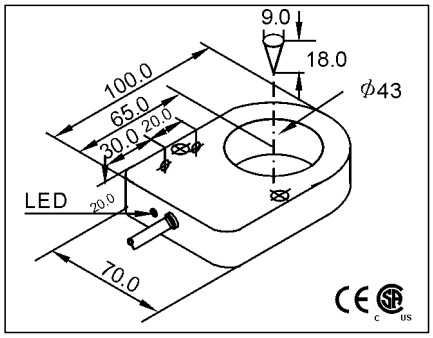		
20~250VAC		
105ms		
<1.8mA		
≤400mA		
<1.8mA		
5A(20ms)		
5mA		
<8V AC at 400mA		
8HZ		
100mS		
<15 % (Sr)		
<1.0% (Sr)		
IP67		
-25°C to 70°C		
<10%(sr)		
D=9mm;L=18mm		
-		
-		
-		
RFI>3V/m / EFT>1KV / ESD>4KV (contact)		
IEC 60947-5-2,Part 7.4.1 / IEC 60947-5-2,Part 7.4.2		

RRP2-R4320A-A2L2/T	9				
RRP2-R4320A-B2L2/T	10				

5.8∅ 2X0.5		
approx.216		

AC RING TYPE INDUCTIVE SENSORS WITH ONE-SHOT FOR CONNECTOR

10mm	15mm	21mm
○	○	○
-	-	-
PBT	PBT	PBT
●	●	●
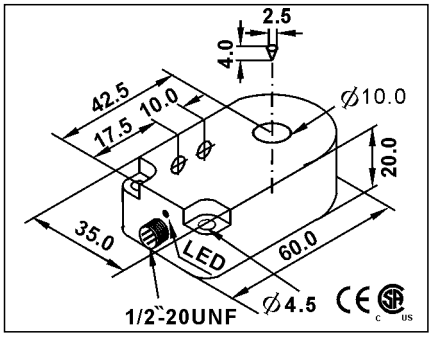	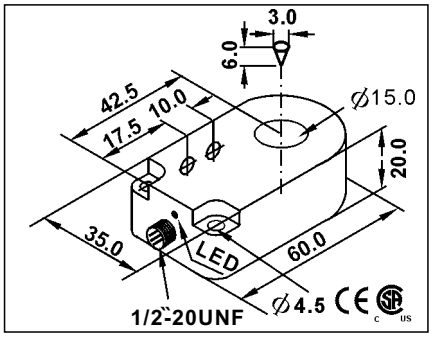	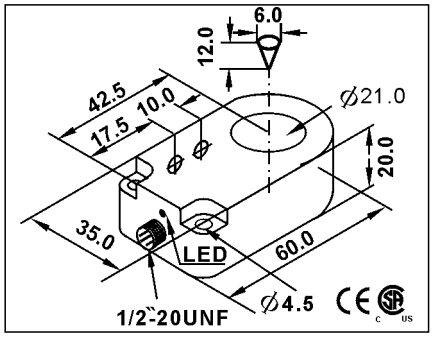
20~250VAC	20~250VAC	20~250VAC
105ms	105ms	105ms
<1.8mA	<1.8mA	<1.8mA
≤400mA	≤400mA	≤400mA
<1.8mA	<1.8mA	<1.8mA
5A(20ms)	5A(20ms)	5A(20ms)
5mA	5mA	5mA
<8V AC at 400mA	<8V AC at 400mA	<8V AC at 400mA
8HZ	8HZ	8HZ
100mS	100mS	100mS
<15 % (Sr)	<15 % (Sr)	<15 % (Sr)
<1.0% (Sr)	<1.0% (Sr)	<1.0% (Sr)
IP67	IP67	IP67
-25°C to 70°C	-25°C to 70°C	-25°C to 70°C
<10%(sr)	<10%(sr)	<10%(sr)
D=2.5mm;L=4mm	D=3mm;L=6mm	D=6mm;L=12mm
-	-	-
-	-	-
-	-	-
RFI>3V/m / EFT>1KV / ESD>4KV (contact)	RFI>3V/m / EFT>1KV / ESD>4KV (contact)	RFI>3V/m / EFT>1KV / ESD>4KV (contact)
IEC 60947-5-2,Part 7.4.1 / IEC 60947-5-2,Part 7.4.2	IEC 60947-5-2,Part 7.4.1 / IEC 60947-5-2,Part 7.4.2	IEC 60947-5-2,Part 7.4.1 / IEC 60947-5-2,Part 7.4.2
RRP2-R1020A-AUL2/T 54	RRP2-R1520A-AUL2/T 54	RRP2-R2120A-AUL2/T 54
RRP2-R1020A-BUL2/T 54	RRP2-R1520A-BUL2/T 54	RRP2-R2120A-BUL2/T 54
approx.50g	approx.48g	approx.44g

AC RING TYPE INDUCTIVE SENSORS WITH ONE-SHOT FOR CONNECTOR

43mm
○
-
PBT
●

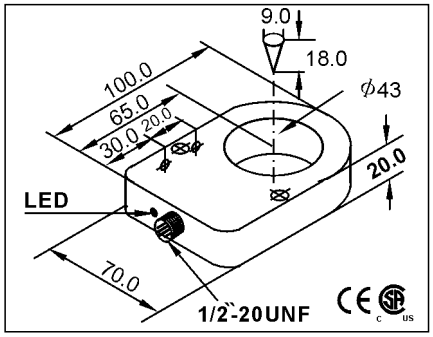

20~250VAC
105ms
<1.8mA
≤400mA
<1.8mA
5A(20ms)
5mA
<8V AC at 400mA
8HZ
100mS
<15 % (Sr)
<1.0% (Sr)
IP67
-25°C to 70°C
<10%(sr)
D=9mm;L=18mm
-
-
-
RFI>3V/m / EFT>1KV / ESD>4KV (contact)
IEC 60947-5-2,Part 7.4.1 / IEC 60947-5-2,Part 7.4.2

RRP2-R4320A-AUL2/T	54
RRP2-R4320A-BUL2/T	54

approx.134